USE AND CARE GUIDE

12X20 FT DOUBLE ROOF HARD TOP GAZEBO

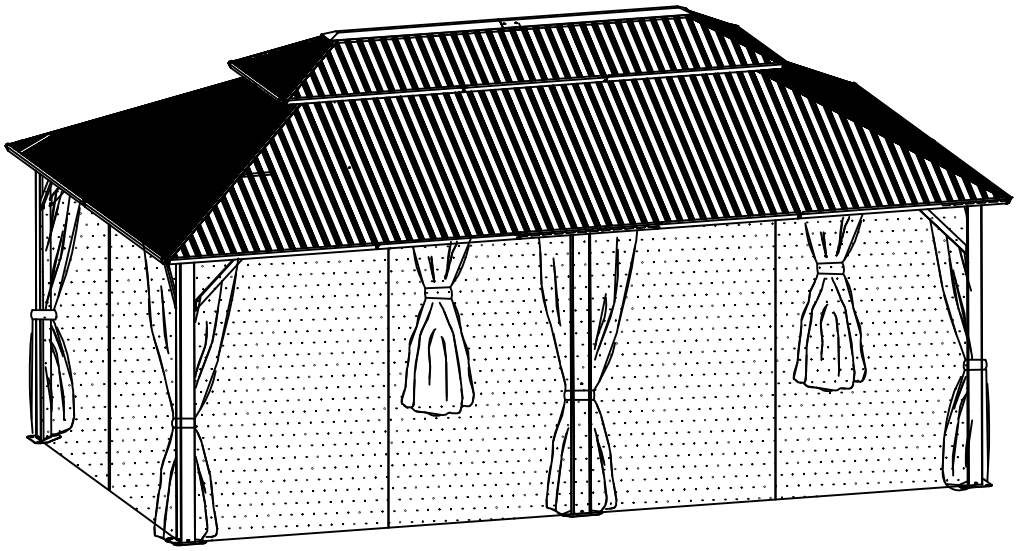

Product comes packaged in 6 boxes that might not arrive together; Safety measures and professional installation are highly recommended.

Questions, problems, missing parts? Before returning to the store, please contact our Customer Service

---

We appreciate the trust and confidence you have placed in HOTEEL through the purchase of our product. We strive to continually create quality products designed to enhance your home. Visit us online to see our full line of products available for your home improvement needs.
Thank you for choosing HOTEEL.

Build Your Outdoor Haven

Made in China

Before Starting Assembly:

- Read all instructions thoroughly.
- Open and check boxes for parts list.
- If any parts are broken or missing, please call or email customer service.
- Keep all packaging until you are satisfied with your product.
- Returns are not accepted without original packaging.
- Make sure you have ample space for assembly.

Safety Information

- Tighten each bolt firmly and properly. Do not completely tighten screws until all screws are started.
- Some parts may contain sharp edges. Wear protective gloves as necessary.
- Children under the age of 16 should not be engaged in the assembly, removal or disassembly of the product. Children under the age of 10 should be supervised by a competent adult while using this product.
- Please keep children out of the assembly area during assembly.
- Never use this product as a support. Do not shake, lean, or climb on the product at any time.
- Do not erect the structure in heavy winds or inclement weather.
- Do not leave up this unit for extended periods of time, as it is not a permanent structure or designed to withstand sustained wind or rain. It is a temporary shelter that shields you from sunlight and rain.
- The screens also block flying insects.
- Do not use candles, matches, or any open flames near the tent.

DANGER: Do not allow children to play with plastic wraps or small parts to prevent potential chocking hazard.

CAUTION: Read all the instructions before assembly. Failure to do so may result in faulty assembly and potential injury!

Pre Assembly Note



1. Four or more people are required for assembly.



2. You will need one or more stepladders.



3. For ease of construction, you may need to use a drill.



4. You may need a safety hat.
Mind Roof Panel Falling !
Do NOT stand under the roof except the installer with a safety hat



5. Wearing protective gloves is recommended.



6. Use the allen key in the box.



7. Please use a Phillips screwdriver.



8. Do not fully tighten screws prior to complete assembly.

REFERENCE IMAGE:

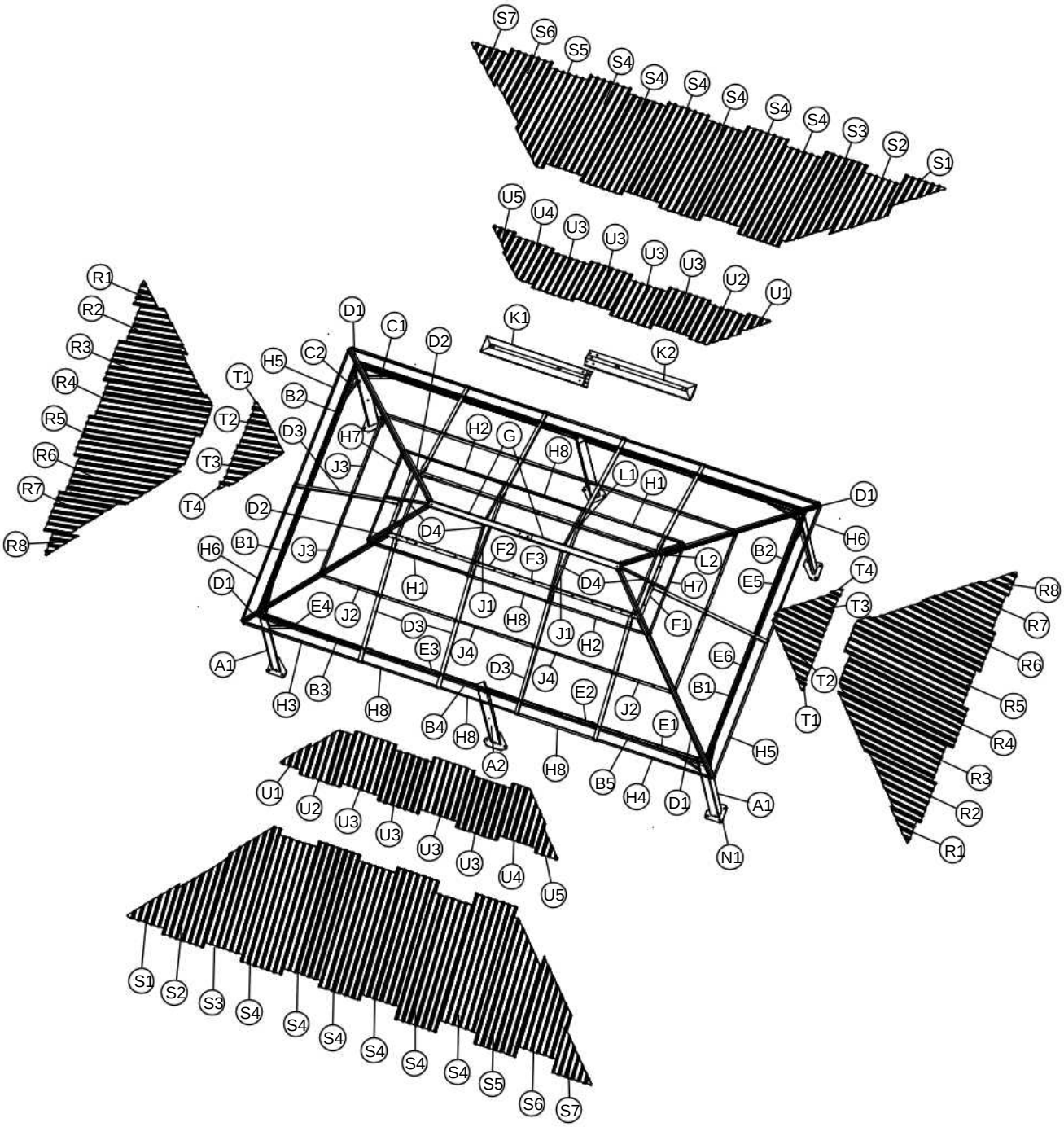

12X20 FT

Make sure there is enough space to assemble this product.

PACKAGE CONTENTS:

Note: Hardware not shown to actual size.

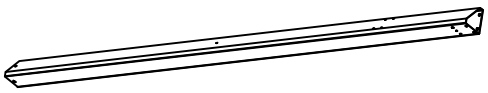

A1 4X Pole

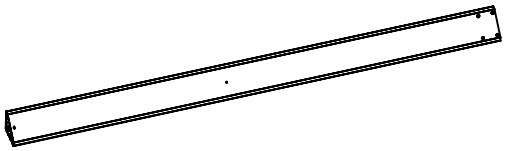

A2 2X Pole

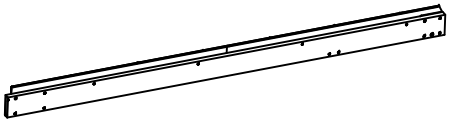

B1 2X Beam

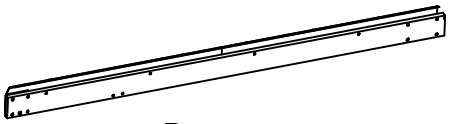

B2 2X Beam

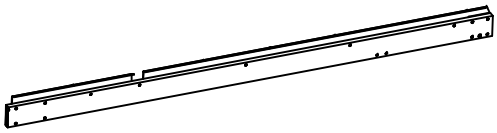

B3 2X Beam

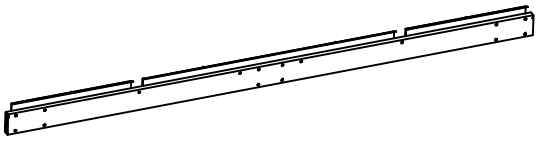

B4 2X Beam

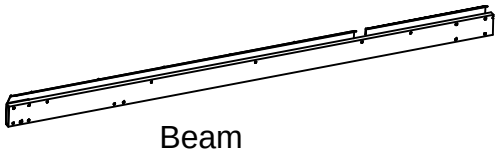

B5 2X Beam

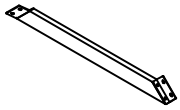

C1 4X Corner Solidifying Bar

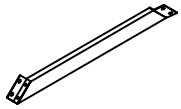

C2 4X Corner Solidifying Bar

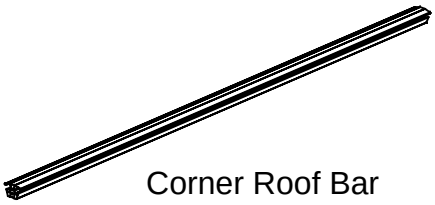

D1 4X Corner Roof Bar

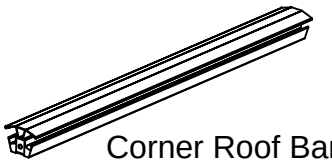

D2 4X Corner Roof Bar

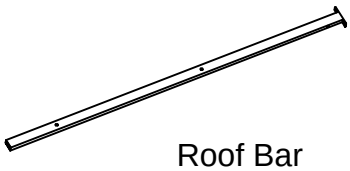

D3 10X Roof Bar

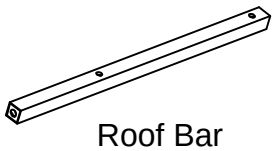

D4 6X Roof Bar



E1 2X Net Frame



E2 2X Net Frame

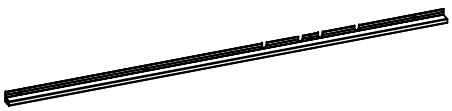

E3 2X Net Frame



E4 2X Net Frame



E5 2X Net Frame

PACKAGE CONTENTS:

Note: Hardware not shown to actual size.



E6 2X Net Frame

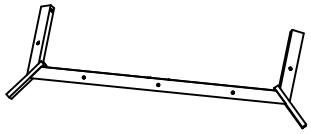

F1 2X Roof Bar



F2 2X Roof Bar



F3 2X Roof Bar



G 2X Roof Bar



H1 2X Finishing Bar



H2 2X Finishing Bar



H3 2X Finishing Bar



H4 2X Finishing Bar



H5 2X Finishing Bar



H6 2X Finishing Bar



H7 2X Finishing Bar



H8 8X Finishing Bar

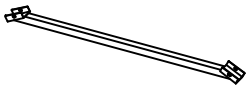

J1 4X Cross-Bar

J2 4X Solidifying Bar

J3 4X Solidifying Bar

J4 6X Solidifying Bar

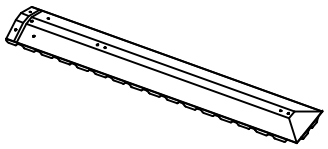

K1 1X Roof Panel

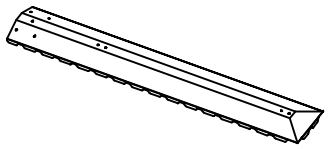

K2 1X Roof Panel

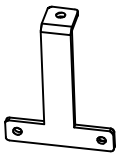

L1 6X Inside Roof Connector



L2 4X Inside Roof Connector



M 6X Inner Connector

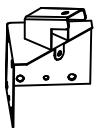

M1 4X Pole Connector



N 6X Base

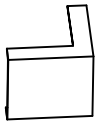

O1 4X Corner Cover



O2 6X Joint Cover



O3 4X Net Frame Connector

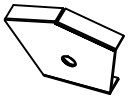

P1 8X Corner Cover

PACKAGE CONTENTS:

Note: Hardware not shown to actual size.

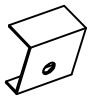 P2 14X Joint Cover	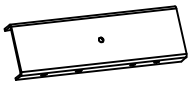 P3 6X Inner Connector	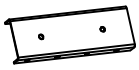 Q 1X Inner Connector
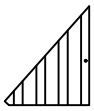 R1 2X	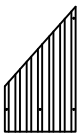 R2 2X	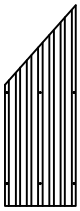 R3 2X
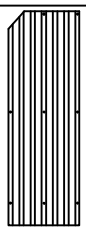 R4 2X	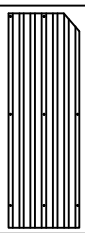 R5 2X	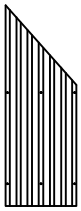 R6 2X
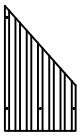 R7 2X	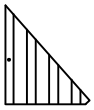 R8 2X	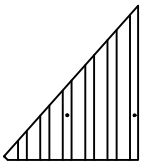 S1 2X
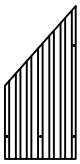 S2 2X	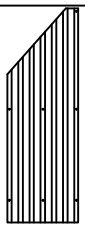 S3 2X	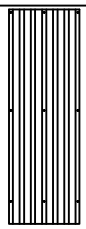 S4 12X
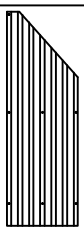 S5 2X	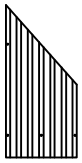 S6 2X	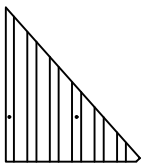 S7 2X
 T1 2X	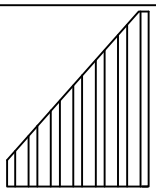 T2 2X	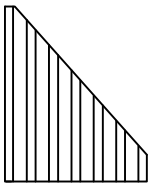 T3 2X
 T4 2X	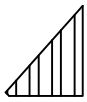 U1 2X	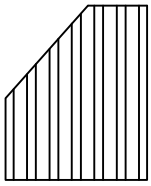 U2 2X
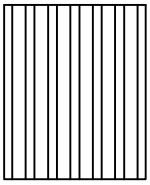 U3 8X	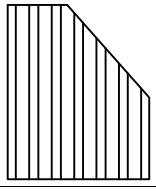 U4 2X	 U5 2X

PACKAGE CONTENTS:

Note: Hardware not shown to actual size.



Ⓥ 152XHook +extra 16Xhook

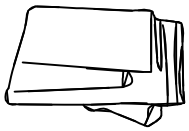

Ⓥ1 2X Side Curtain

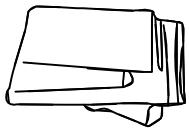

Ⓥ2 2X Side Curtain

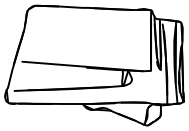

Ⓥ3 2X Side Curtain

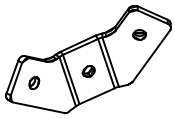

Ⓦ 4X Connecting Patch

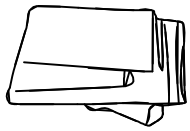

Ⓦ1 2X Mosquito Sidewall

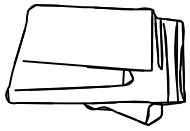

Ⓦ2 2X Mosquito Sidewall

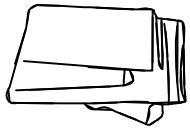

Ⓦ3 2X Mosquito Sidewall



Ⓧ 10X Solidifying Bar



Ⓧ1 1X Roof Mosquito Net

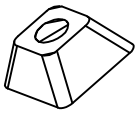

Ⓨ 156X+extra 8 Spacer



Ⓩ 10X Connector



M6X15

① 374+extra 10 Screws



20X+extra 2



62X+extra 4

M6X22

② Screws



M6X40

③ 32X+extra 4 Screws



M6X45

④ 42X+extra 4 Screws



⑤ 24X Screws



M6X10

⑥ 5X Screws



M5X12

⑦ 6X+extra 1 Screws



ST4. 0X12

⑧ 8X+extra 2 Screws



M6X52

⑨ 8X Screws



⑩ 4X Lamp Hook



Rubber gasket

⑪ 156X+extra 10



⑫ 18X Screws



ST4. 0X25

⑬ 4X Screws

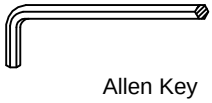

1X

Allen Key

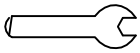

1X

Wrech



1X



A1 4X



A2 2X

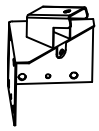

M1 4X



N 6X

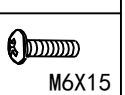

M6X15

1 22X

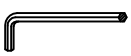

1X

6

<1>

Connect (PART M1) with poles (PART A1) using screws 1# as shown in diagram.

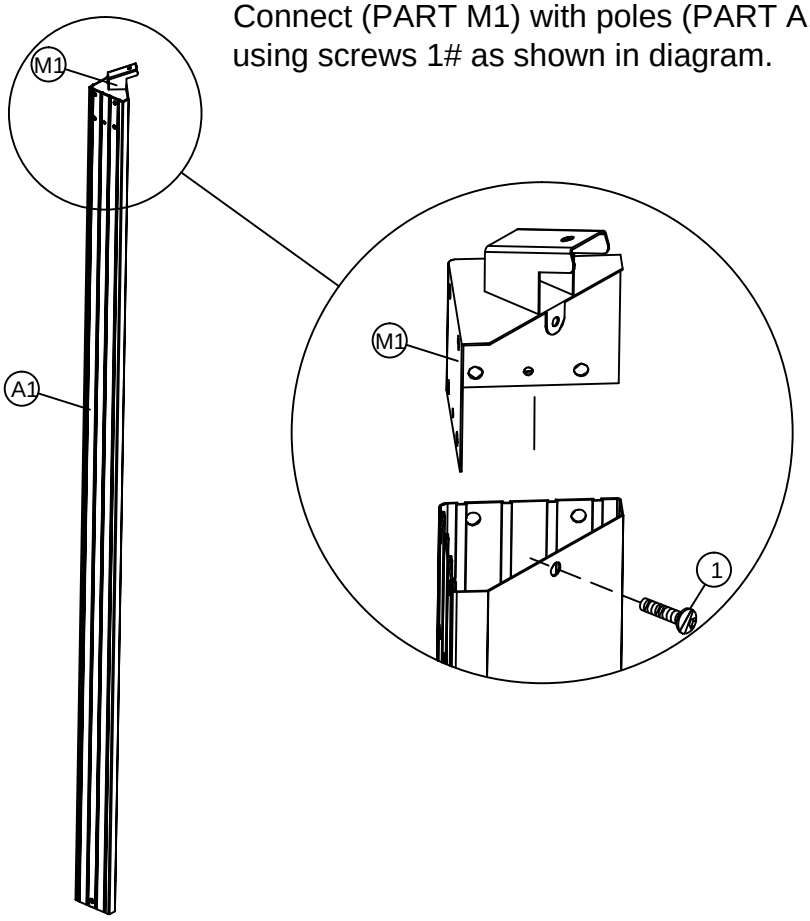

<2>

Set up poles (PART A1& A2) with base (PART N) using screws 1# as shown in diagram.

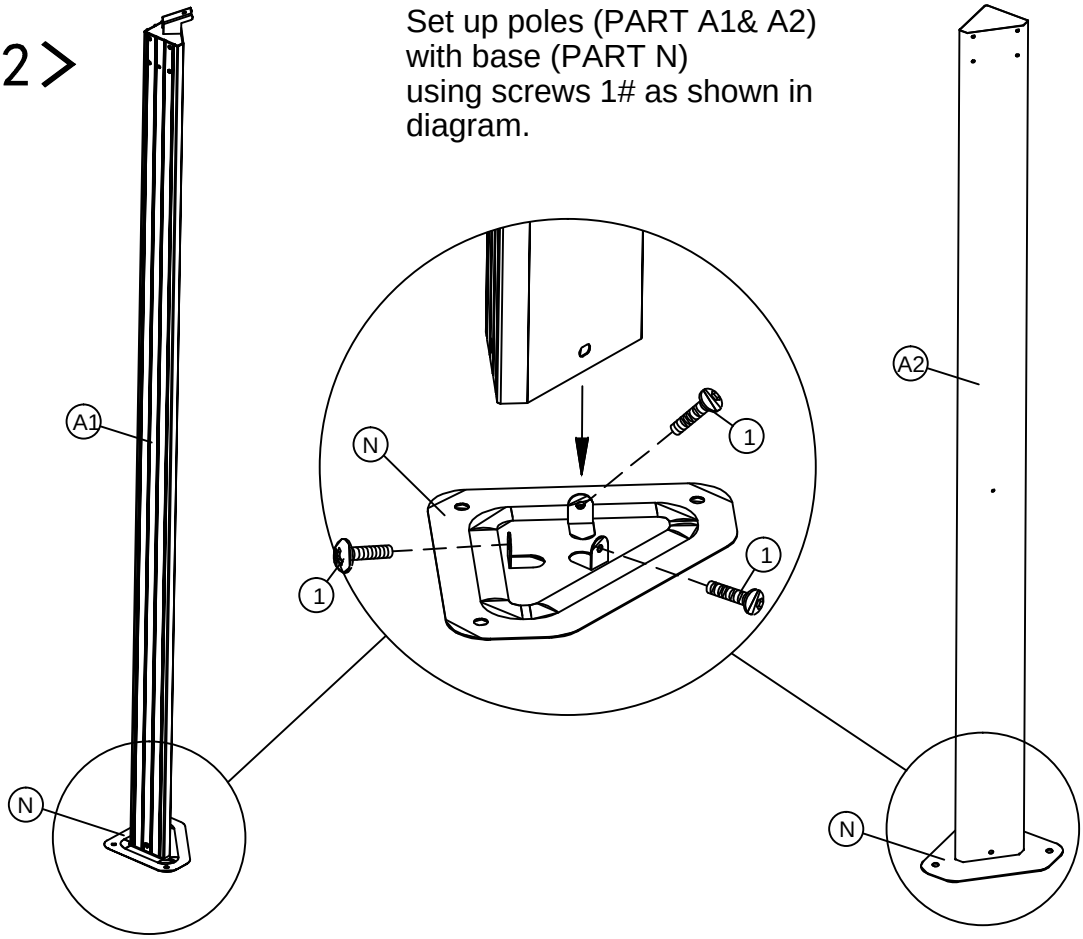

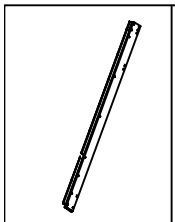

B1 2X

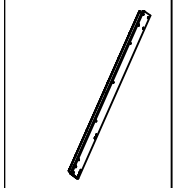

B2 2X



E5 2X



E6 2X

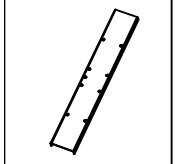

M 2X



V 56X



M6X15

1 32X

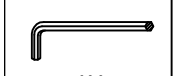

1X

7

<3>

Connect (PART B1 & B2) into one beam using inner connector (PART M), after the alignment slots of B1 and B2 are fully matched, secure (PART E6 & E5) together with B1 and B2 using screw 1# as shown in diagram.

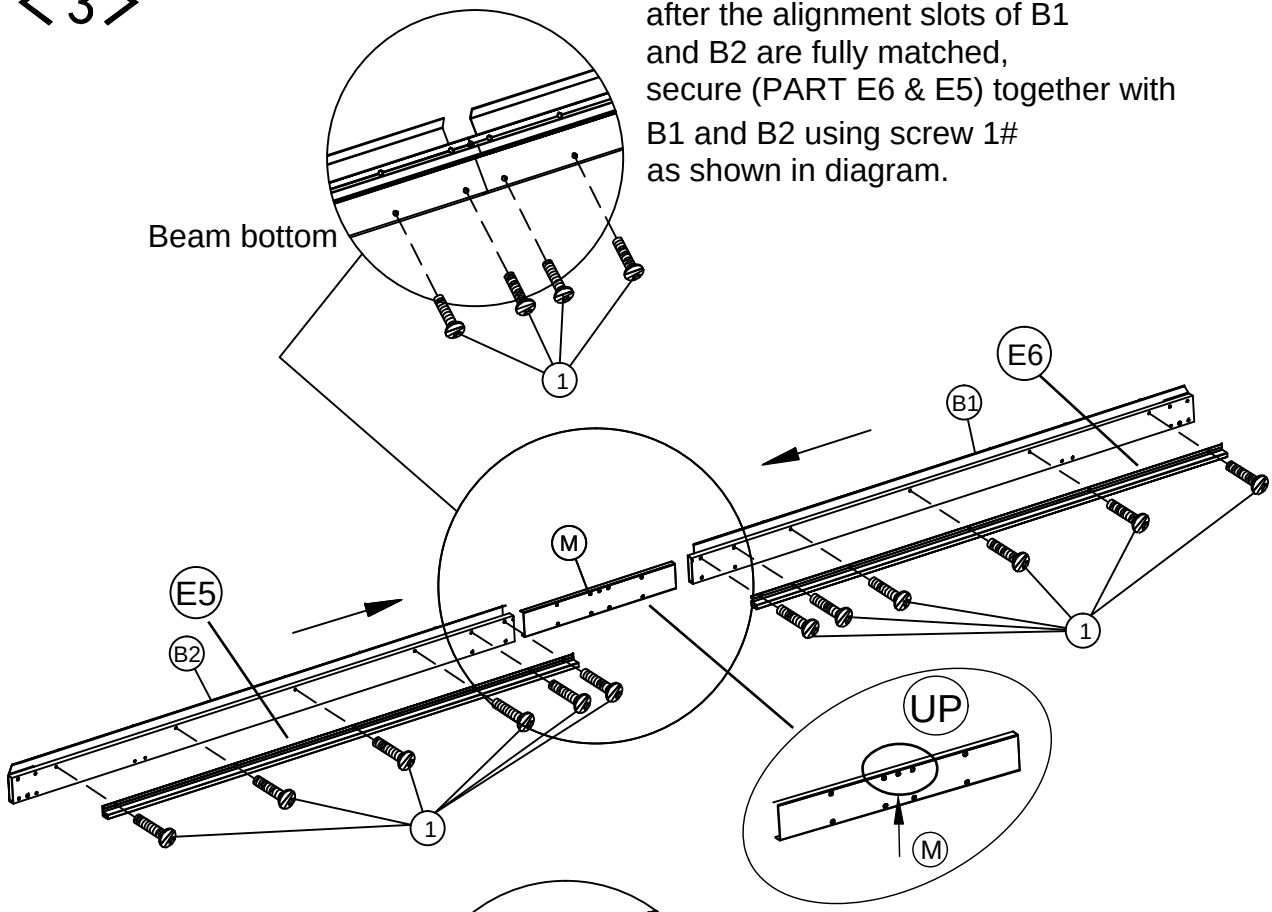

Put 7 hooks (PART V) to each slot of Sidewall track E5 and E6.

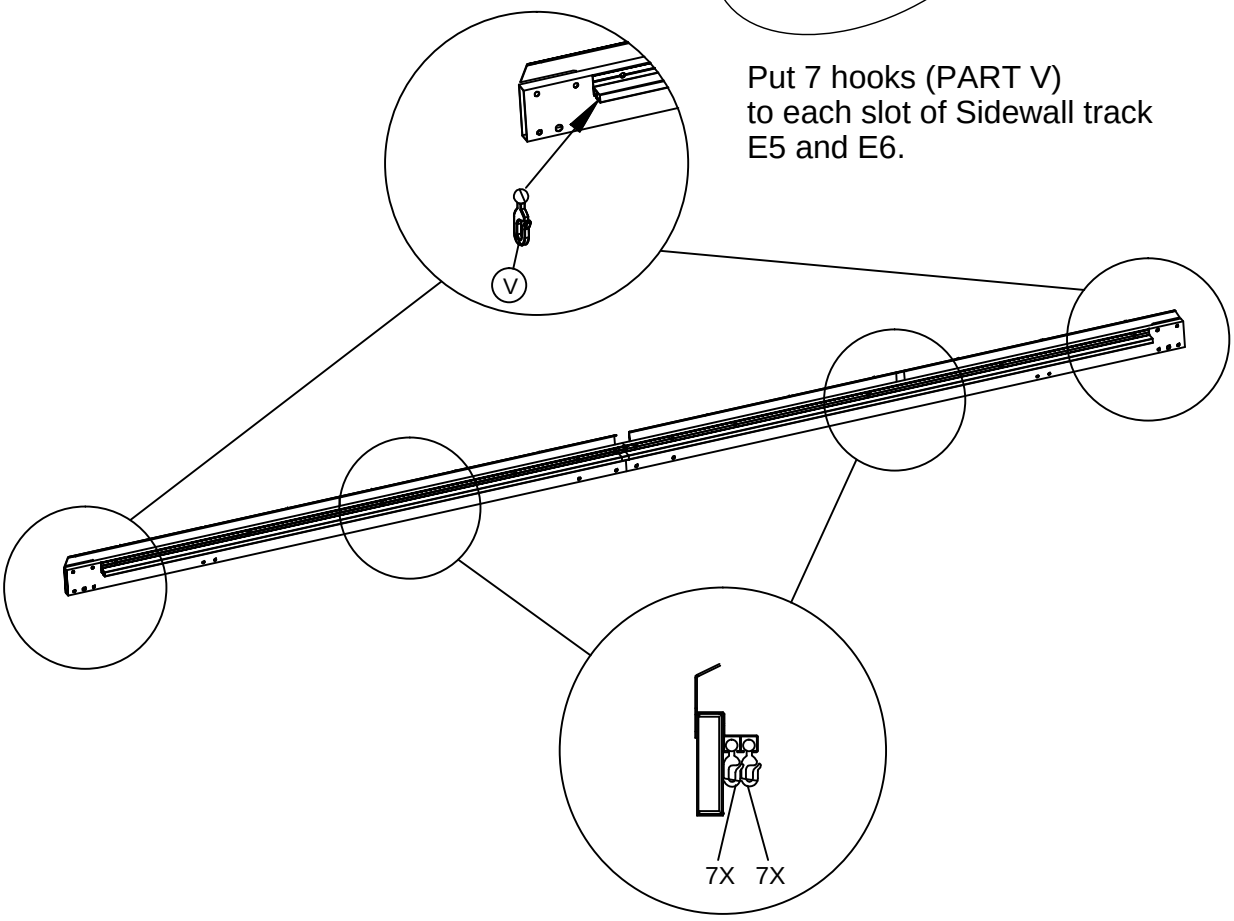



B4 2X



M 4X



M6X15

1 8X

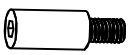

5 8X



1X

<4>

Connect inner connector (PART M) together with beam (PART B4) using screws (#1), shown as diagram.

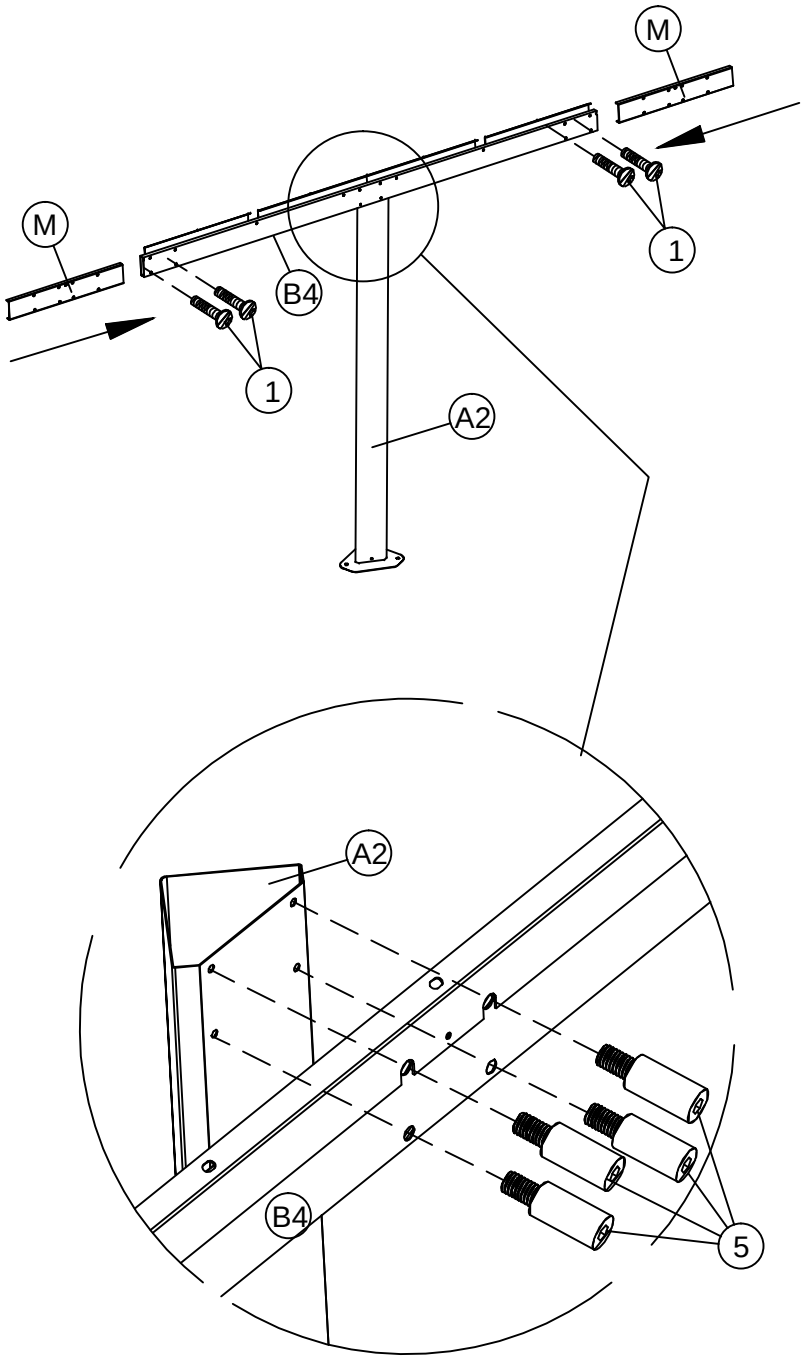

Connect beam (PART B4) together with pole (PART A2) using screws (#5), shown as diagram.



B3 2X



B5 2X



E1 2X



E4 2X



V 48X



M6X15

1 28X



5 16X

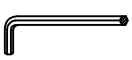

1X

9

<5>

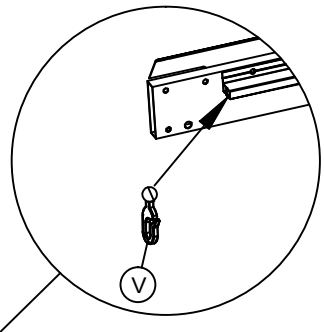

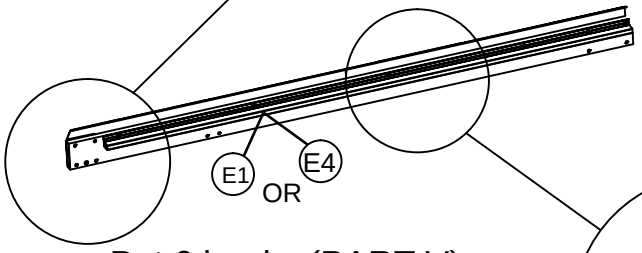

Put 6 hooks (PART V)
to each slot of Sidewall track
E1 and E4.

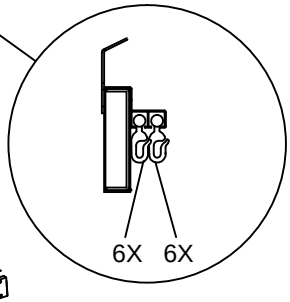

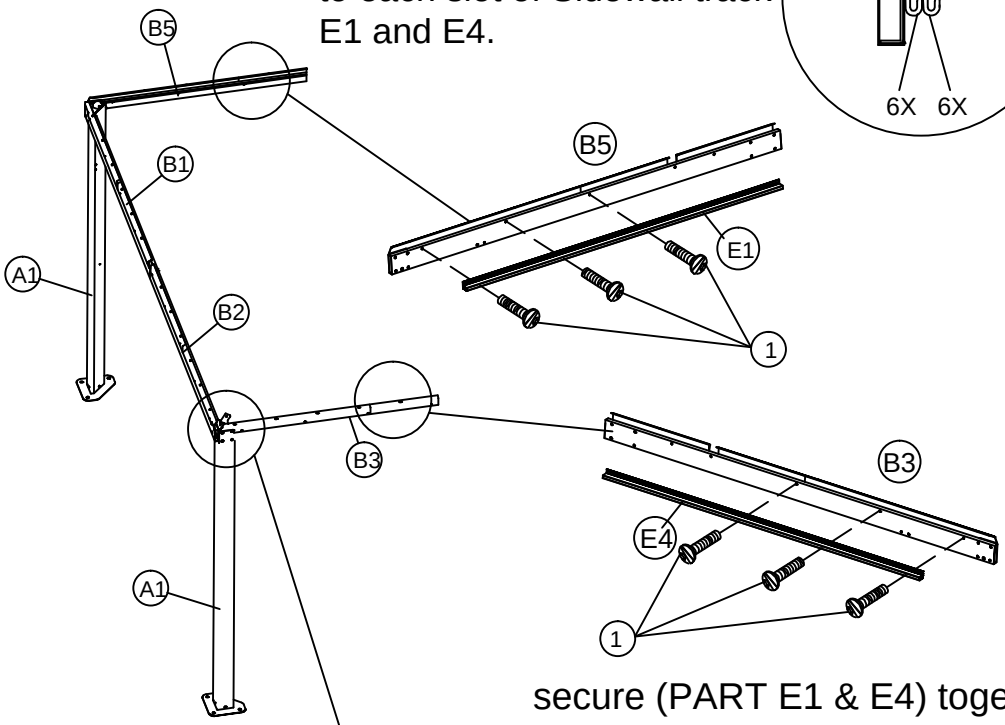

secure (PART E1 & E4) together with
B3 and B5 using screw 1#
as shown in diagram.

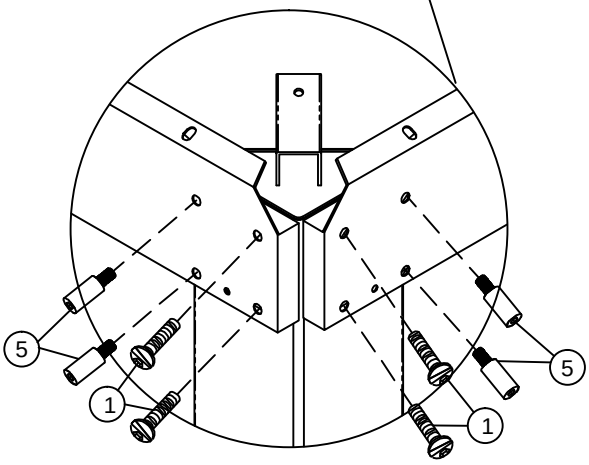

Connect beam (PART B3&B2,PART B1&B5) together
with pole (PART A1),using screws (#1 & #5)
as shown in diagram.

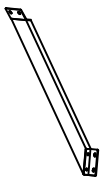

C1 4X

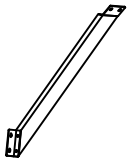

C2 4X



M6X15

1 32X

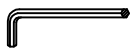

1X

<6>

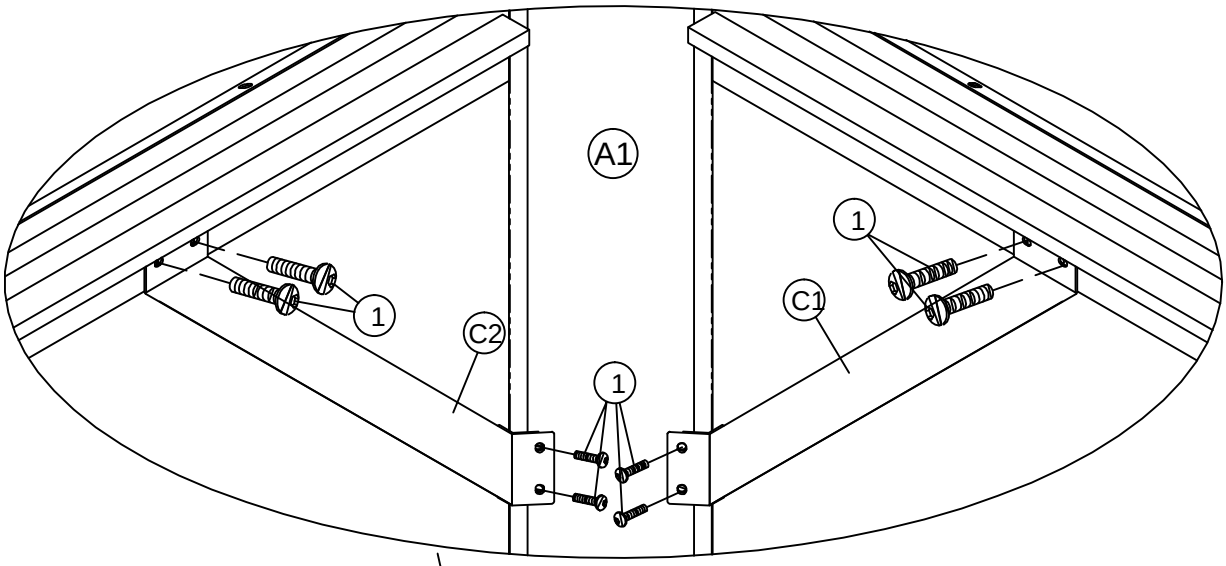

Affix the frame with corner solidifying bars (PART C1&C2) using screws 1# as shown in diagram.

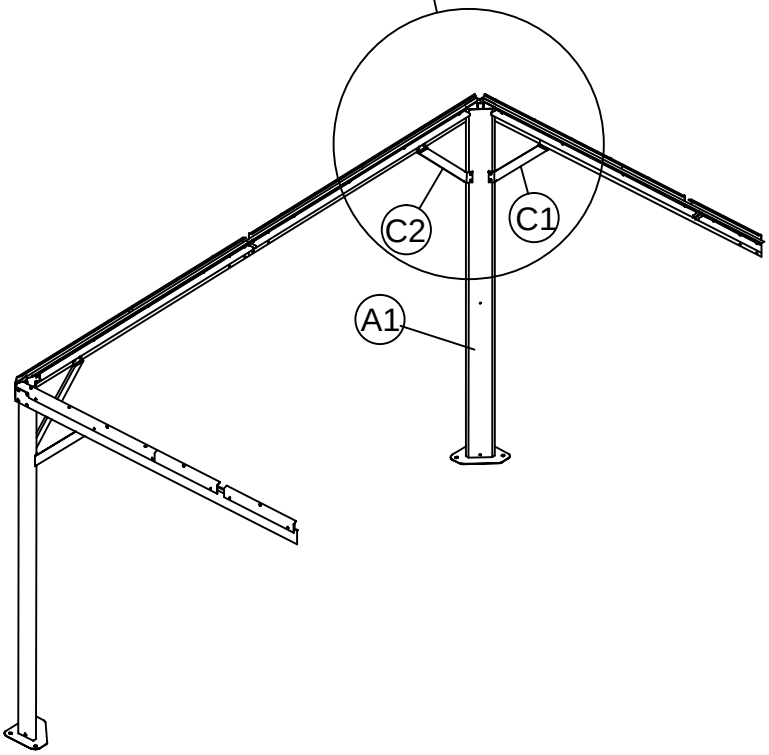

<7>

secure Net Frame (PART E2 & E3) together with Beam (PART B3, B4 and B5) using screw #1 as shown in diagram.

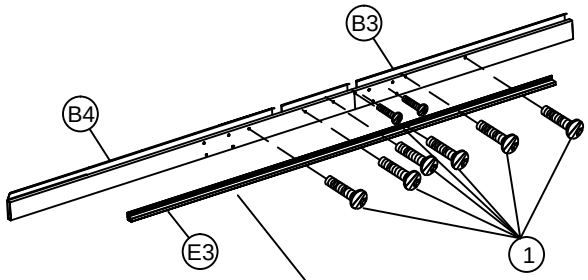

Attach Net Frame Connector (PART O3) to the beam, using screws #1.

Put 6 hooks (PART V) to each slot of Sidewall track E2 and E3.

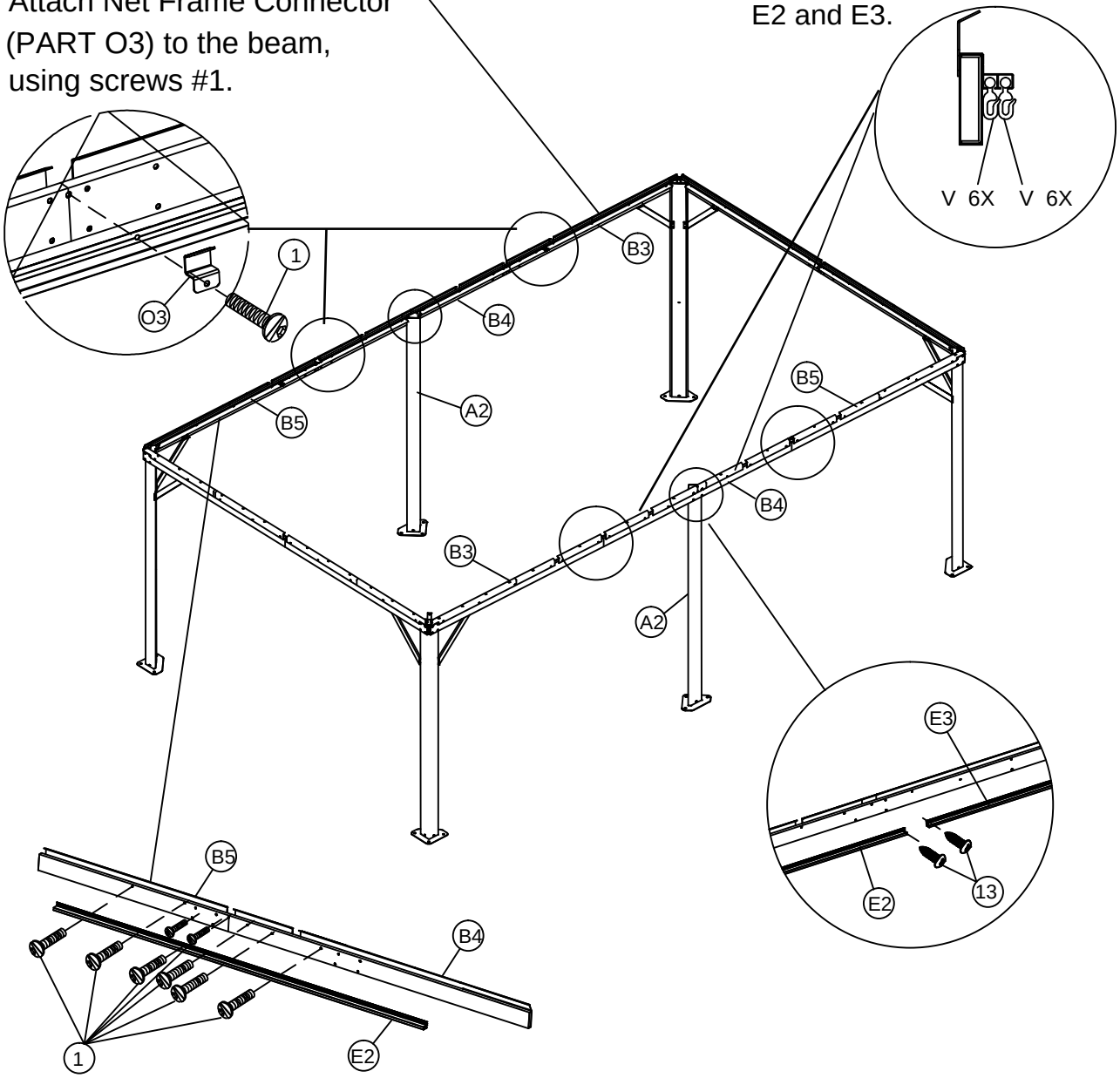

E2 2X

E3 2X

O3 4X

V 48X

M6X15
1 36X

ST4. 0X25
13 4X

1X

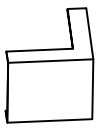

01 4X



02 6X



M5X12

7 6X



ST4. 0X12

8 8X



1X

<8>

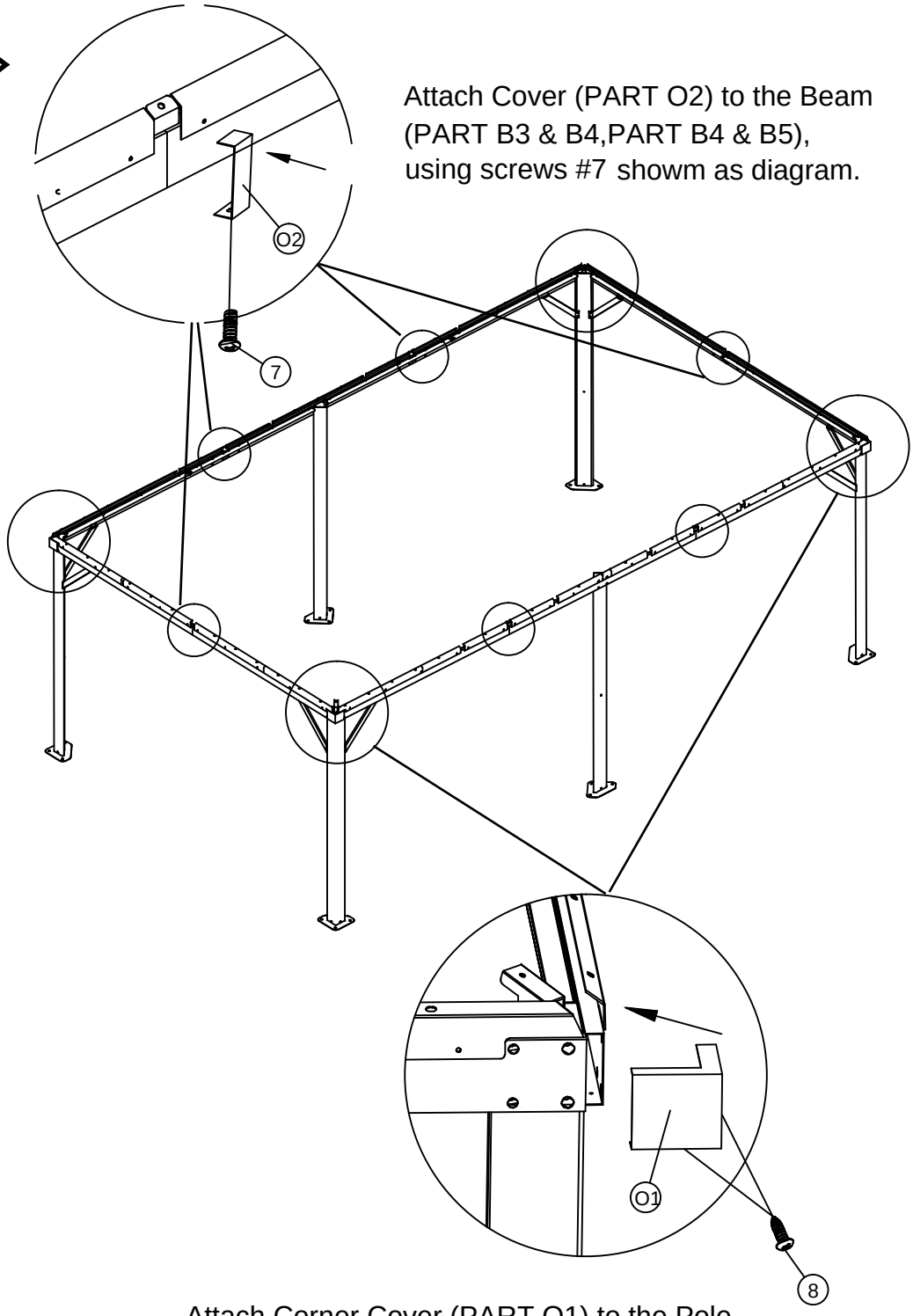

Attach Cover (PART O2) to the Beam (PART B3 & B4,PART B4 & B5), using screws #7 showm as diagram.

Attach Corner Cover (PART O1) to the Pole (PART A1), using screws #8 showm as diagram.

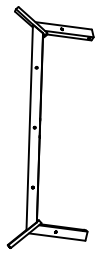

F1 2X



F2 2X



F3 2X

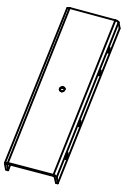

P3 6X



M6X15

1 48X



1X

<9>

When assembling the Hook and loop fasten should be facing inward.

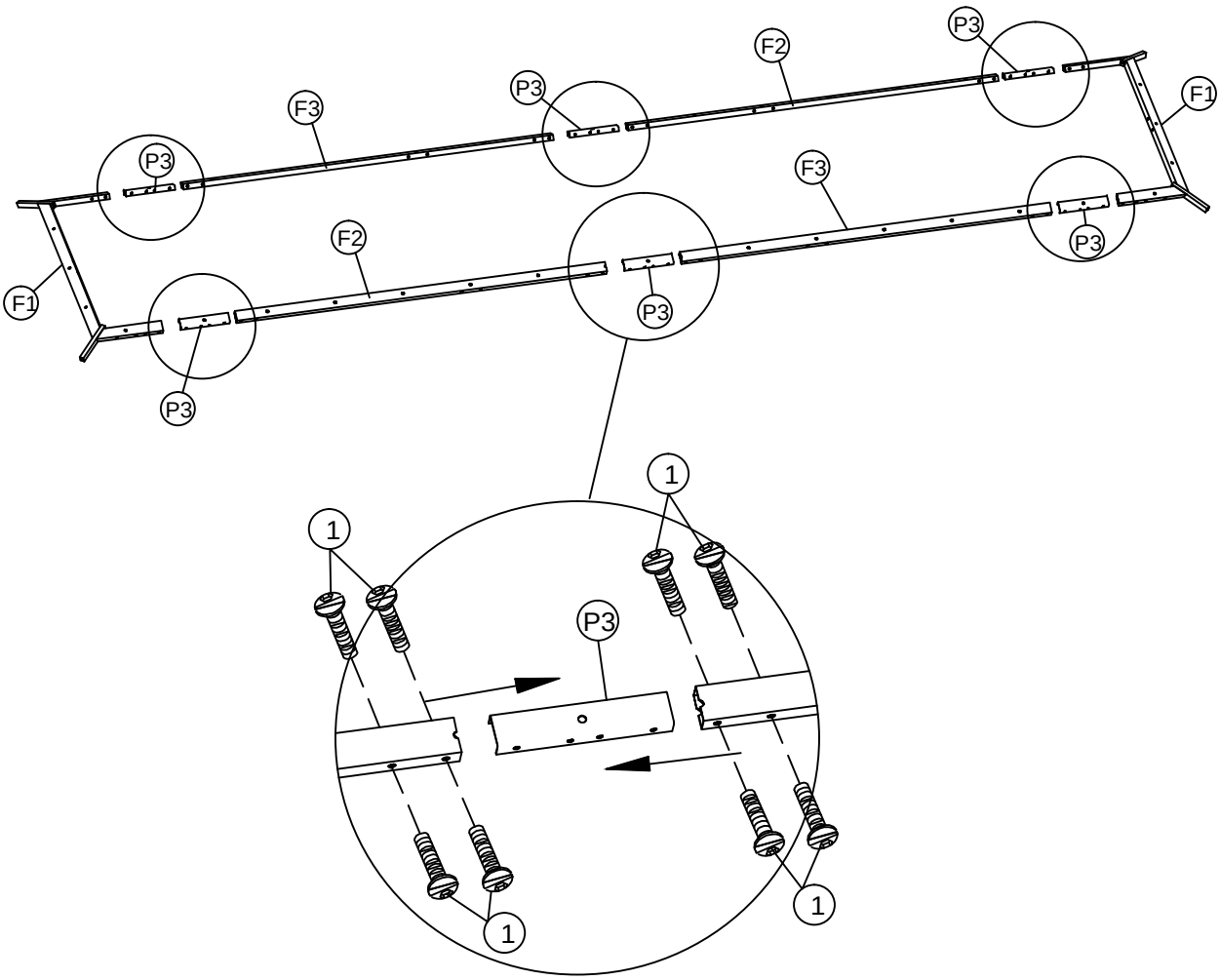

Connect the roof bar (PART F1 & F2, F3) together with inner connector (PART P3),using screw 1# as shown in diagram.

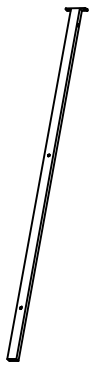

D3 10X



Z 10X



M6X15

1 20X



1X

<10>

Connect connector (PART Z) on the roof bar (PART D3) using screw 1# as shown in diagram.

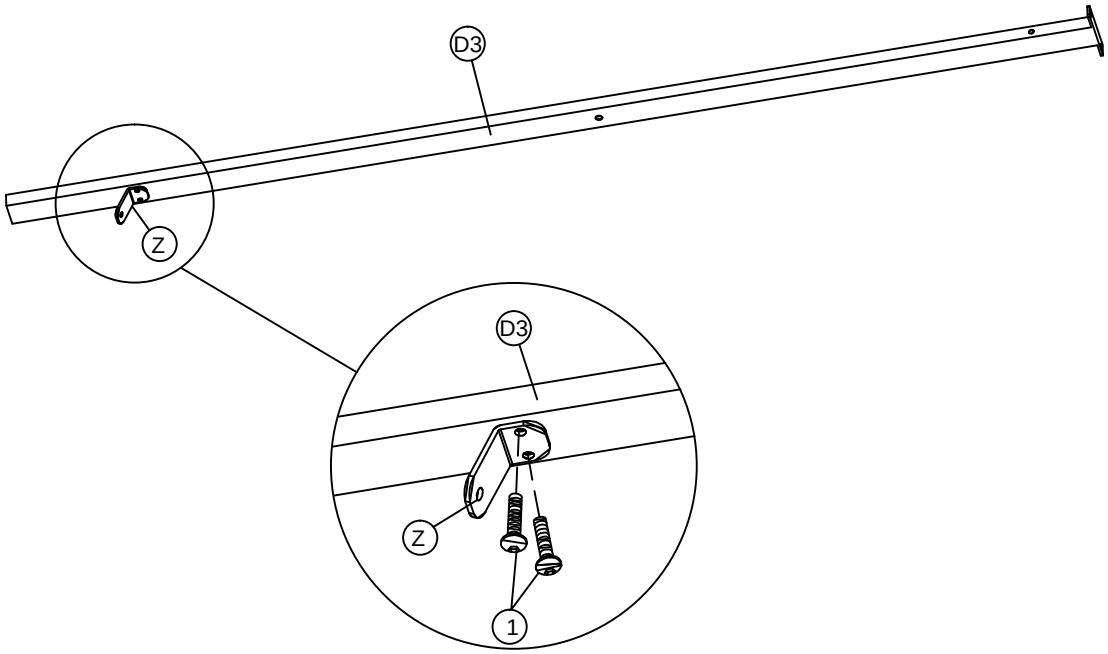



J1 2X



10 2X



D3 6X
(with Z)



M6X15

1 18X



M6X52

9 4X



1X

15

<11>

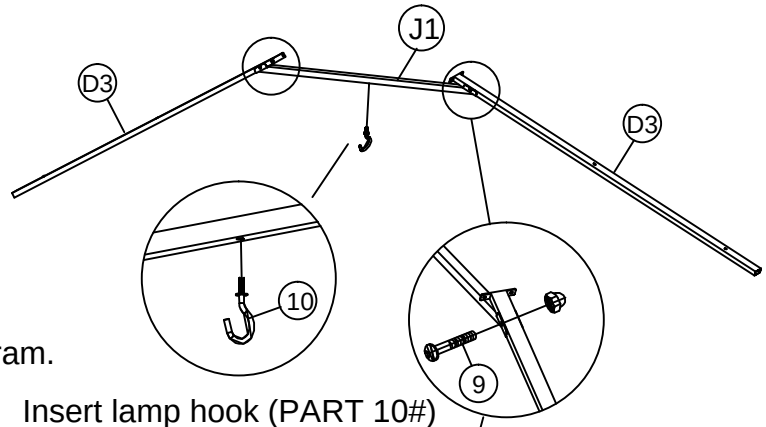

Connect roof bar (PART D3)
together with roof bar F1
using screw 1#, shown as in diagram.

Insert lamp hook (PART 10#)
into the Cross-Bar (PART J1)
shown as in diagram.

Connect Cross-Bar
(PART J1)
to Roof Bar (PART D3)
using screw #9
shown as in diagram.

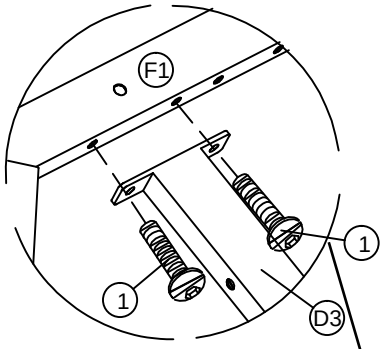

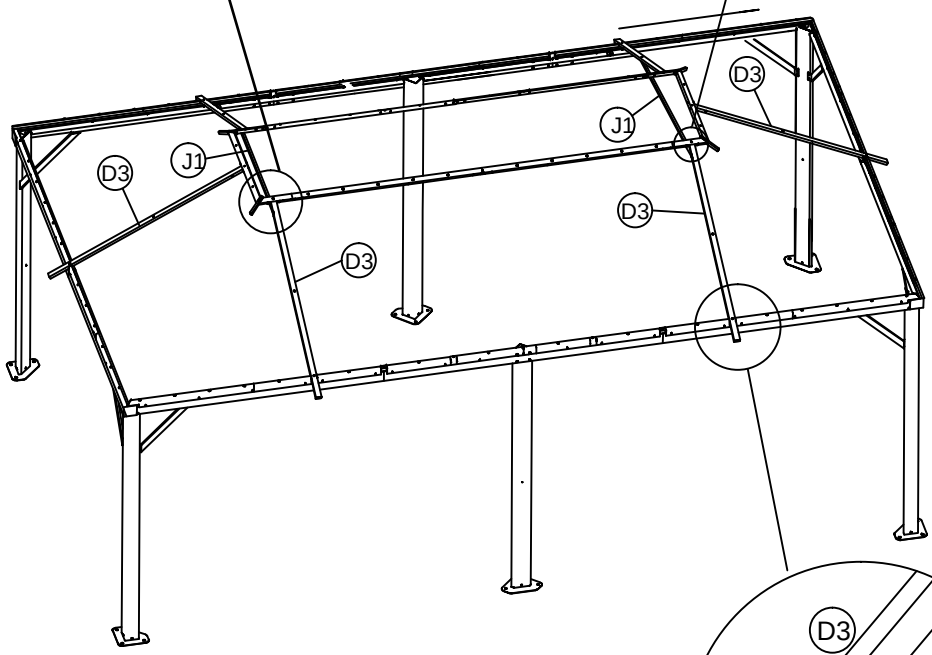

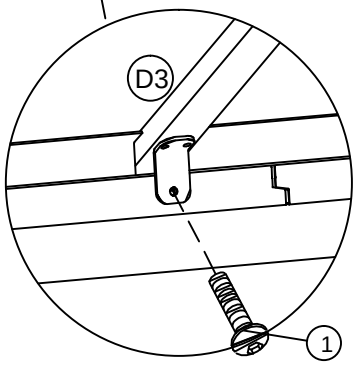

Connecet Roof Bar (PART D3)
to Beam, using screws #1,
shown as in diagram.

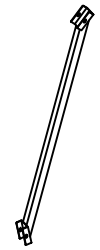

J1 2X

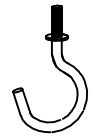

10 2X



D3 4X
(with Z)



M6X15

1 12X



M6X52

9 4X

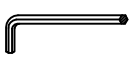

1X

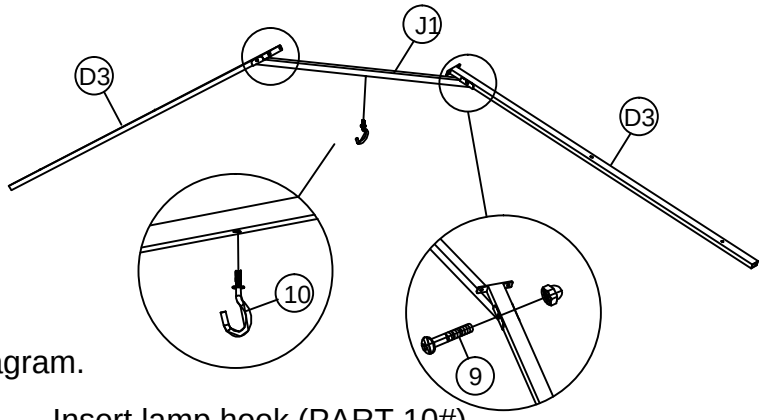

<12>

Connect roof bar (PART D3)
together with roof bar F1
using screw 1#, shown as in diagram.

Insert lamp hook (PART 10#)
into the Cross-Bar (PART J1)
shown as in diagram.

Connect Cross-Bar
(PART J1)
to Roof Bar (PART D3)
using screw #9
shown as in diagram.

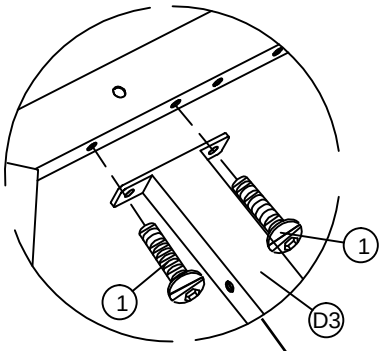

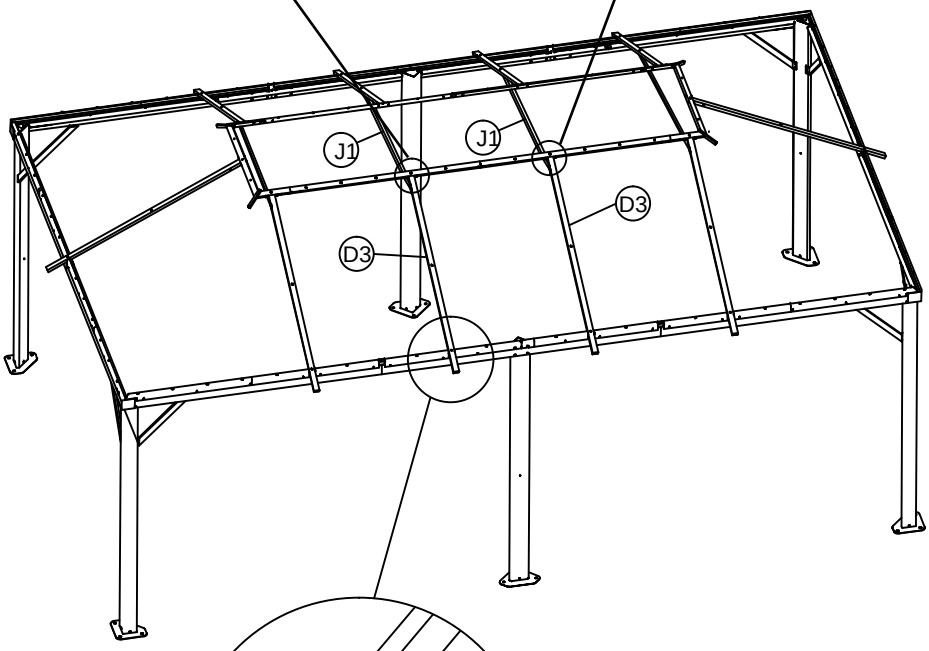

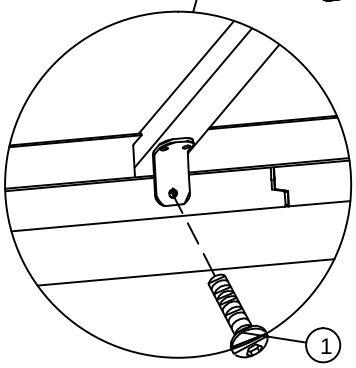

Connecet Roof Bar (PART D3)
to Beam, using screws #1,
shown as in diagram.



D1 4X



M6X15

1 12X



1X

<13>

Connect the corner roof bar (PART D1) with roof bar (PART F1) using screw 1# as shown in diagram.

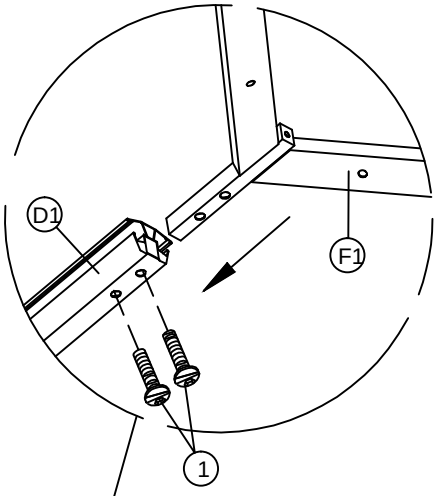

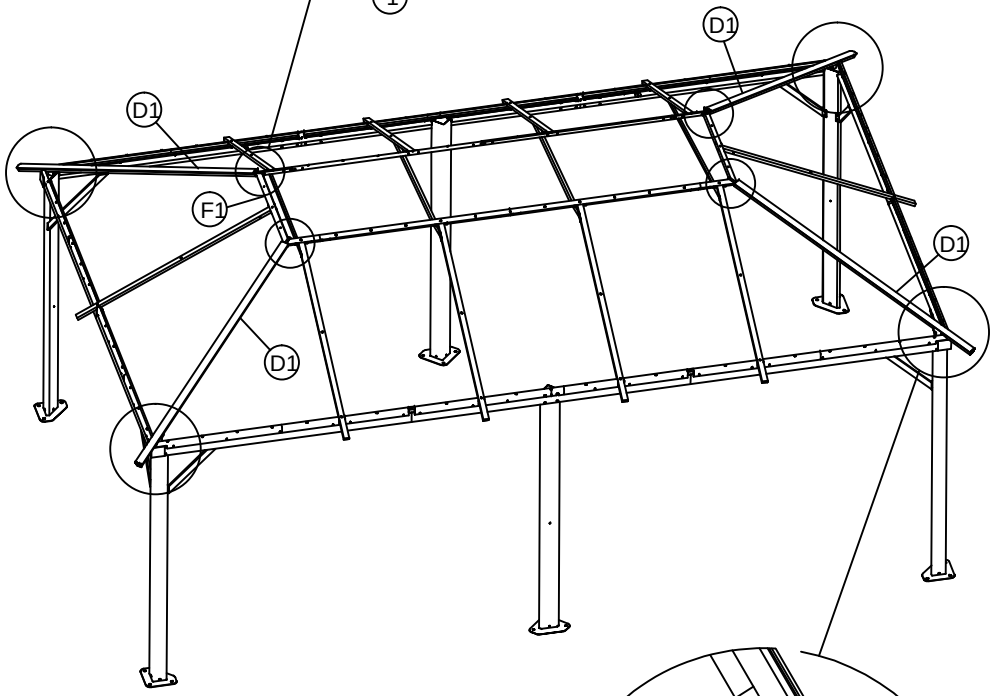

Connect the corner roof bar (PART D1) with pole connector (PART M1) using screw 1# as shown in diagram.

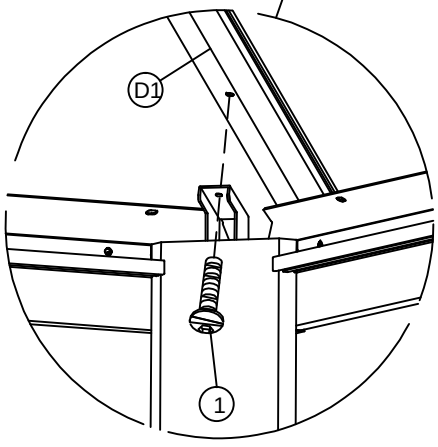

<14>

Connect inside roof connector (PART L1)
on inside roof frame (PART F1, F2 , F3),
using screw 1# as shown in diagram.

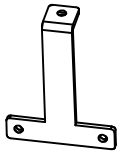

L1 6X



L2 4X



M6X15

1 16X

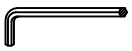

1X

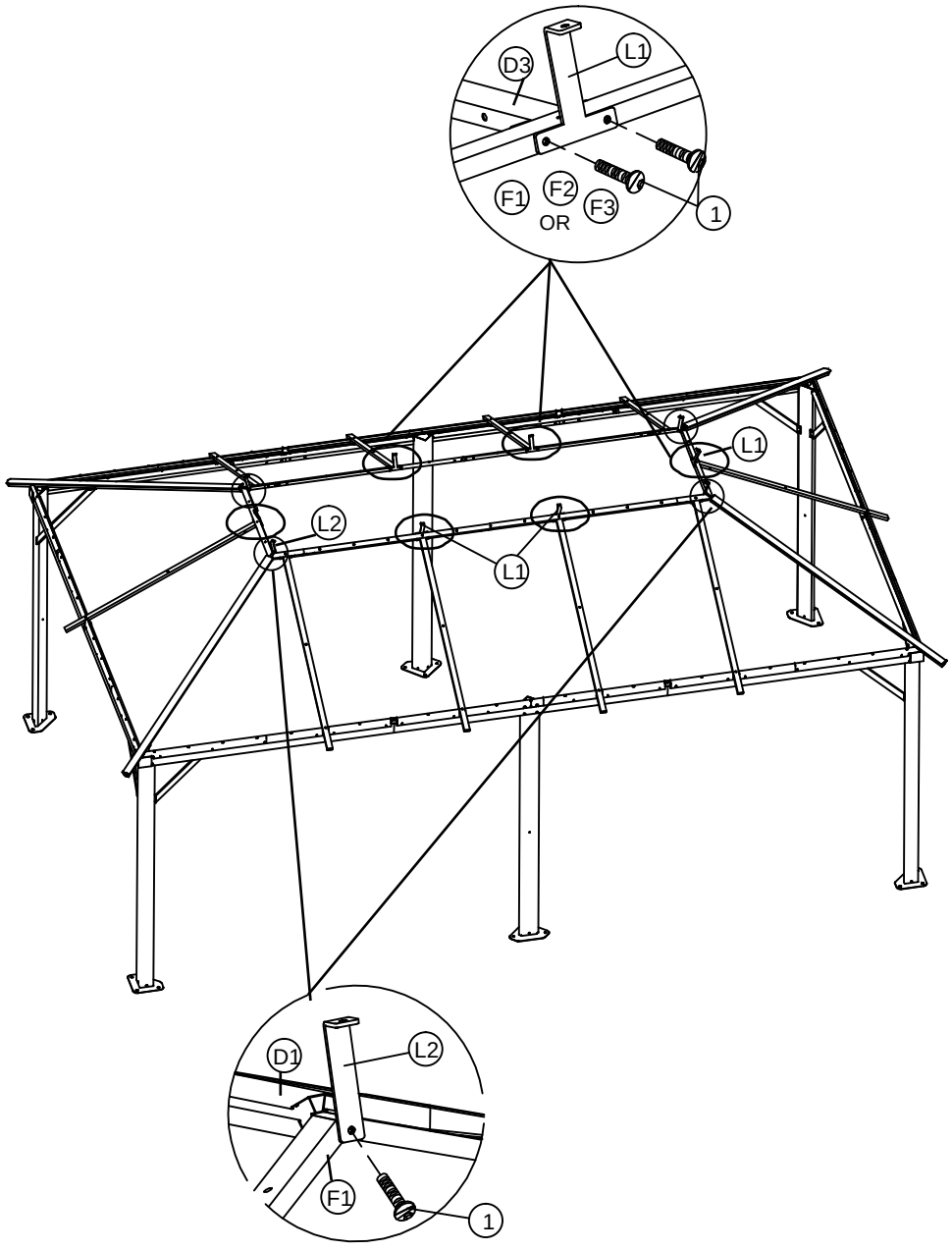

Connect inside roof connector (PART L2)
on inside roof frame (PART F1),
using screw 1# as shown in diagram.

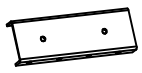

Q 1X

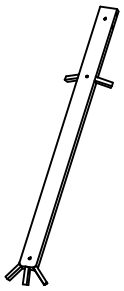

G 2X

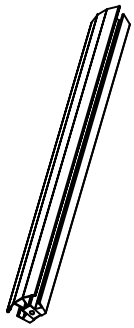

D2 4X



D4 6X



M6X15

1 10X

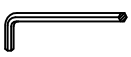

1X

19

<15>

Connect Roof Bar (PART G) together by connector (PART Q) using screw (#1), shown as in diagram.

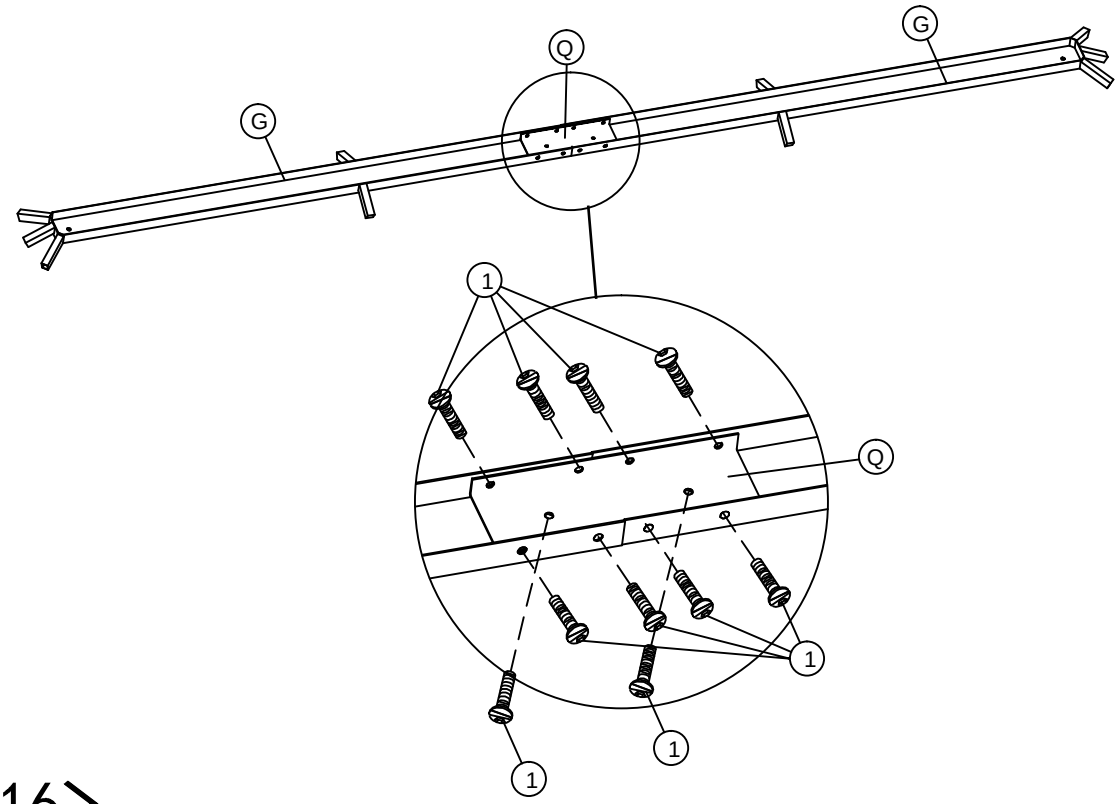

<16>

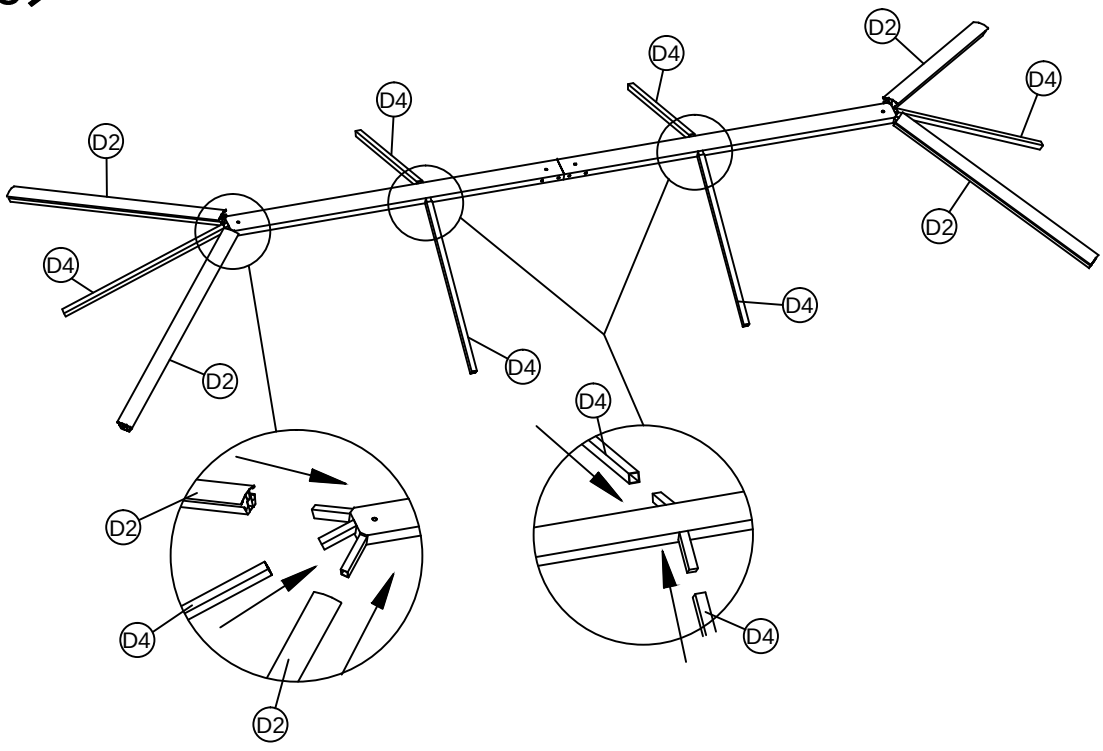

Connect roof bar (PART D2, D4) together with roof bar (PART G) as shown in diagram.

<17>

Put Step 16 finished roof frame (PART G & D2 & D4) on Inside roof frame (PART F1& F2 & F3).

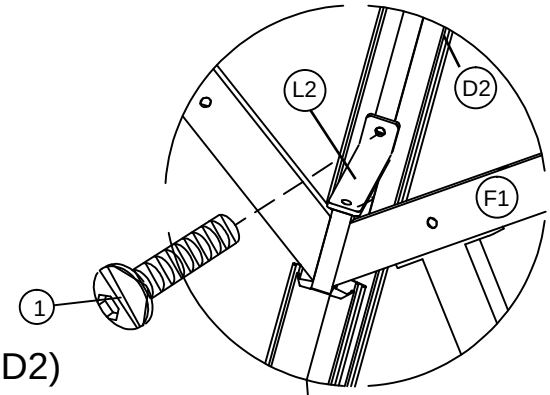

Connect roof bar (PART D2) with inside roof connector (PART L2) using screw 1# as shown in diagram.

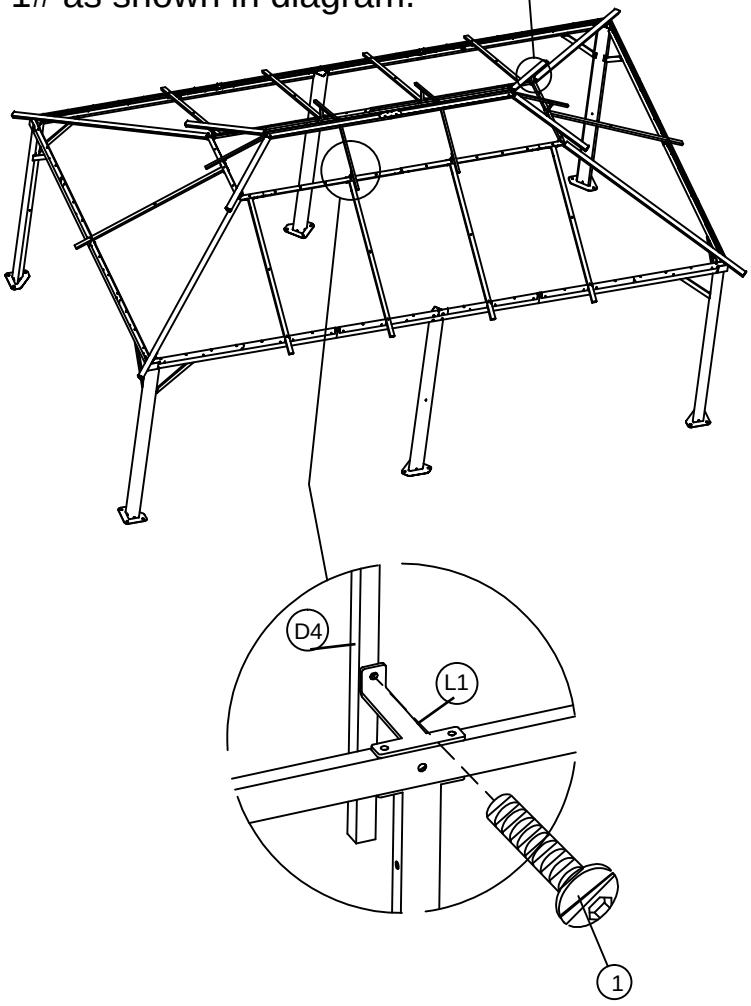

Connect roof bar (PART D4) together with inside connector (PART L1) using screw 1# as shown in diagram.



M6X15

1 10X



1X

J2 4X

J3 4X

J4 6X

W 4X

X 10X

M6X15

1 42X

1X

21

<18>

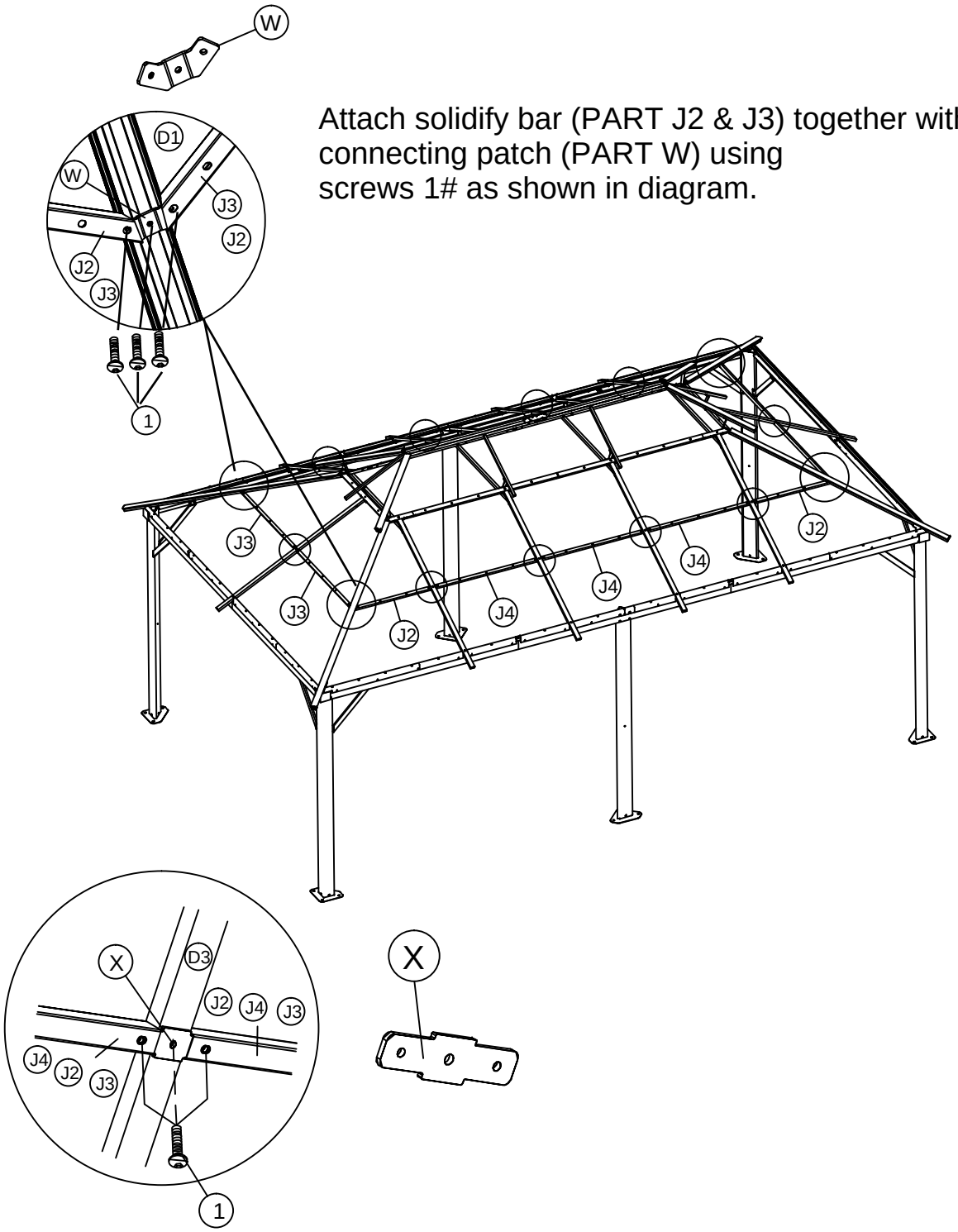

Attach solidify bar (PART J2 & J3) together with connecting patch (PART W) using screws 1# as shown in diagram.

Attach solidify bar (PART J4 & J2, PART J3&J3, PART J4 & J4, PART J2 & J4) together with connecting patch (PART X) using screws 1# as shown in diagram.

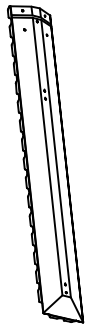

K1 1X

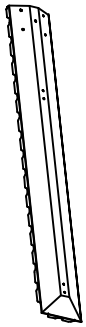

K2 1X



M6X10

6 5X

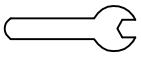

22

<19>

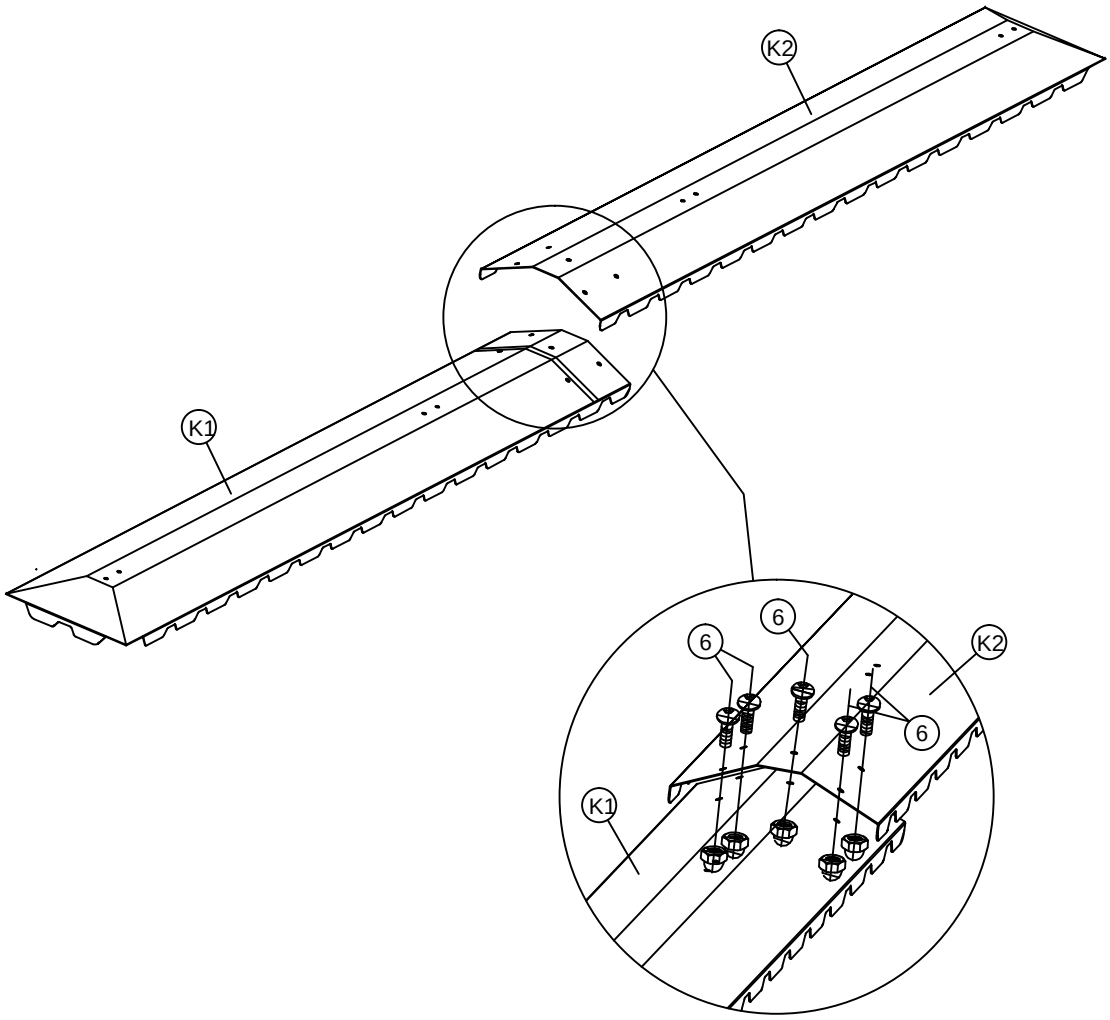

Connect Roof Panel (PART K1 & K2) together using screws (#6), shown as in diagram.

<20>

Attach Roof Panel (PART K1, K2) to the inner roof (PART G), solidify them using screw (#1), shown as in diagram.

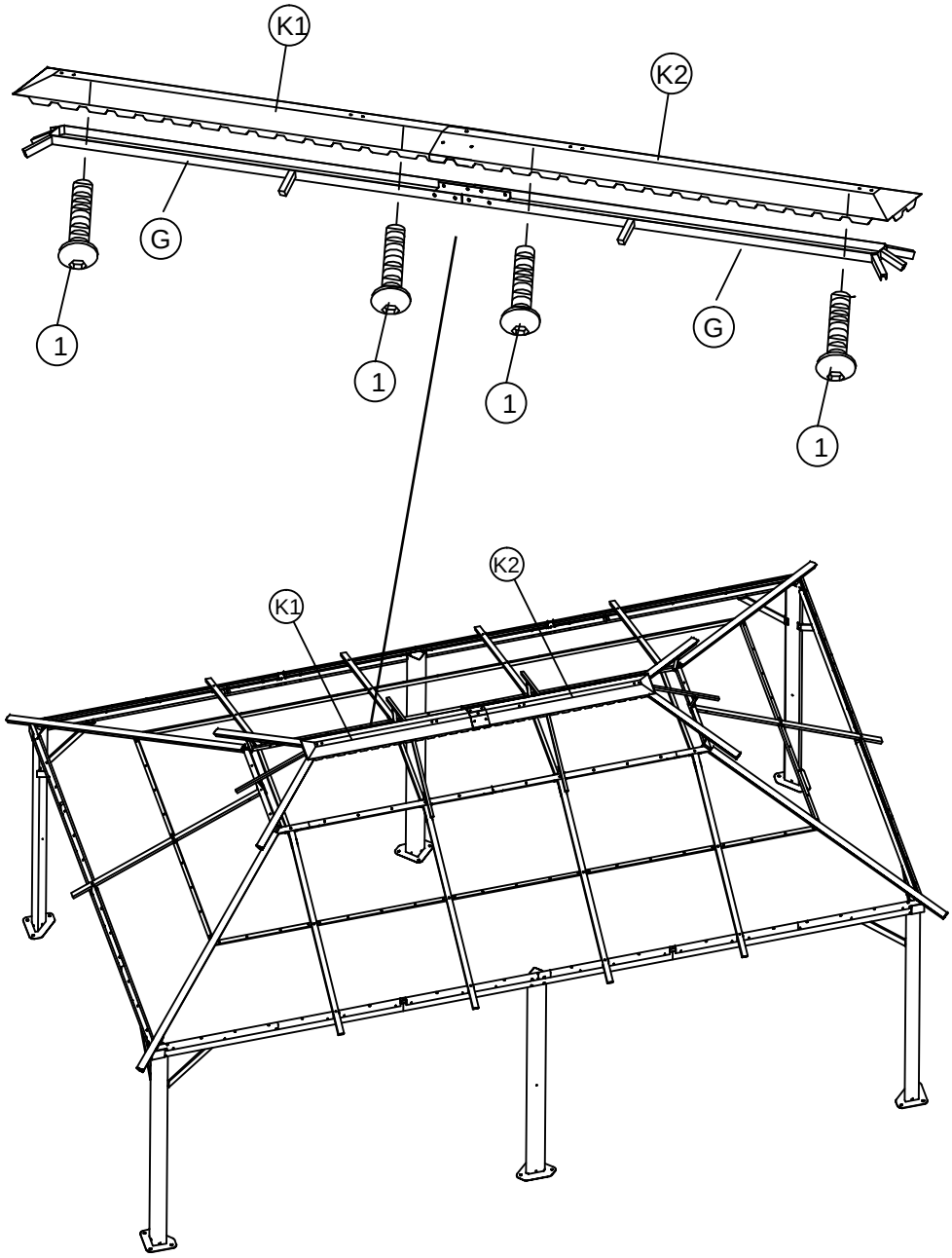


M6X15
(1) 4X

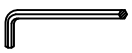
1X

<21>

H1 2X

H2 2X

H7 2X

H8 2X

T1 2X

T2 2X

T3 2X

T4 2X

U1 2X

U2 2X

U3 8X

U4 2X

U5 2X

P1 4X

P2 4X

M6X15

1 10X

1X

24

Mind Roof Panel Falling !
Do NOT stand under the roof except the installer with a safety hat !

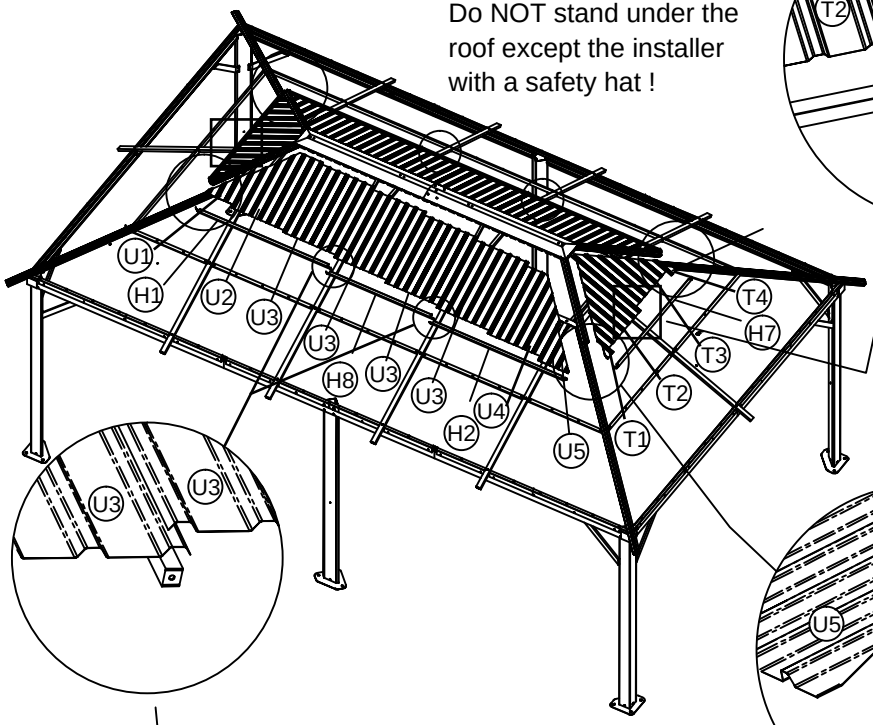

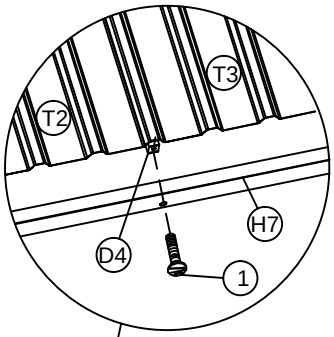

Attach Finishing Bar (PART H7) to the Roof Bar (PART D4) using screws (#1), shown as in diagram.

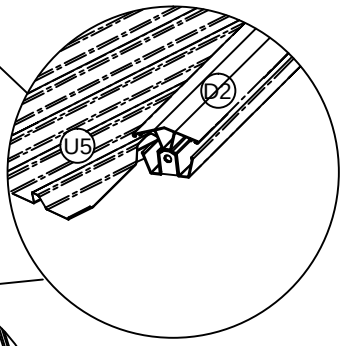

Connect roof as below.

Connect roof as below.

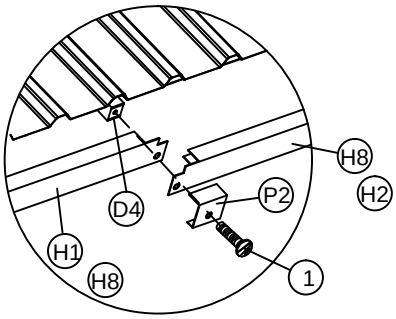

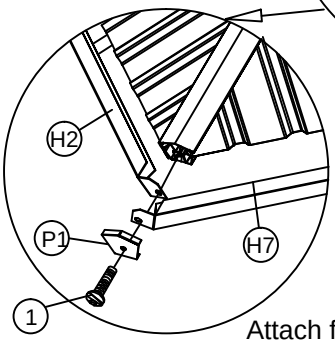

Attach finishing bar (PART H2 & H7) with finishing end (PART P1) using screws 1# to corner roof bar (PART D2), as shown in diagram, you may need to bent the bar ends a little to make it match the joint.

Attach finishing bar (PART H8 & H1) with joint cover (PART P2) to Roof Bar (PART D4) using screws 1# as shown in diagram.

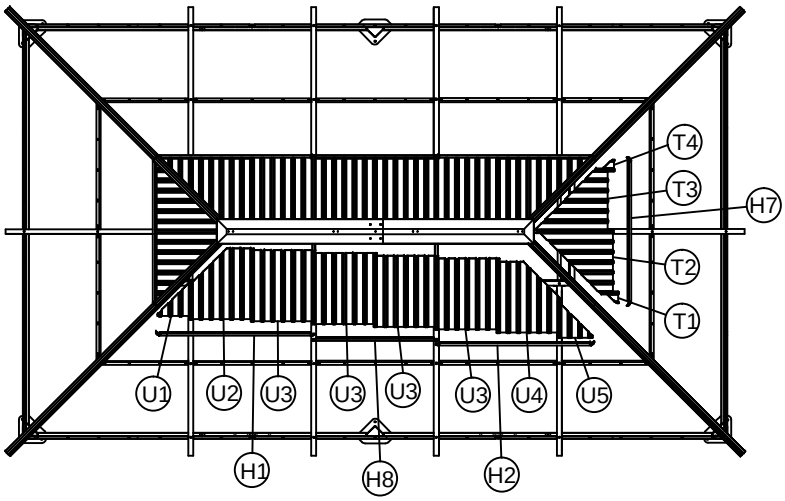

Push the roof panels (PART U1,U2,U3,U4,U5,T1,T2,T3,T4) to upper roof as shown in diagram.

H3 2X
H4 2X
H5 2X
H6 2X
H8 6X
R1 2X
R2 2X
R3 2X
R4 2X
R5 2X
R6 2X
R7 2X
R8 2X
S1 2X
S2 2X
S3 2X
S4 12X
S5 2X
S6 2X
S7 2X
P1 4X
P2 10X
M6X15
1 14X
1X

25

Mind Roof Panel Falling !
Do NOT stand under the roof except the installer with a safety hat !

<22>

Attach finishing bar (PART H5&H6) with joint cover (PART P2) to Roof Bar (PART D3) using screws 1# as shown in diagram

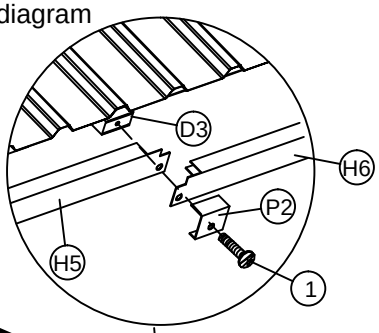

Attach finishing bar (PART H8&H4 or H8&H8 or H8&H3) with joint cover (PART P2) to Roof Bar (PART D3) using screws #1 as shown in diagram.

Attach finishing bar (PART H5&H4 or H3&H6) with joint cover (PART P2) to Roof Bar (PART D3) using screws 1# as shown in diagram
you may need to bent the bar ends a little to make it match the joint.

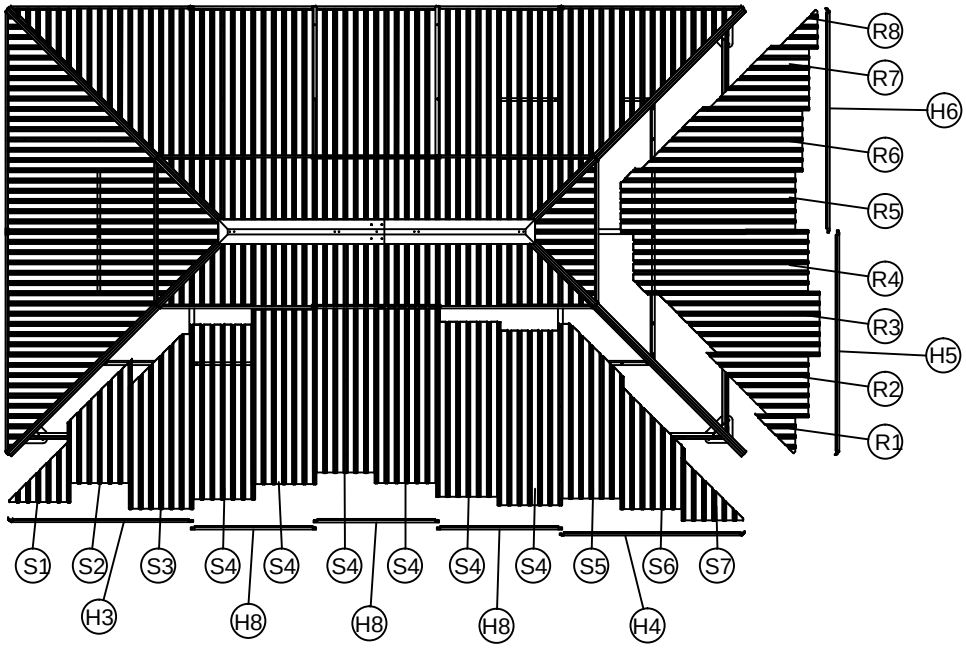

<23>

Mind Roof Panel Falling !
Do NOT stand under the roof except the installer with a safety hat !

Long Side View:

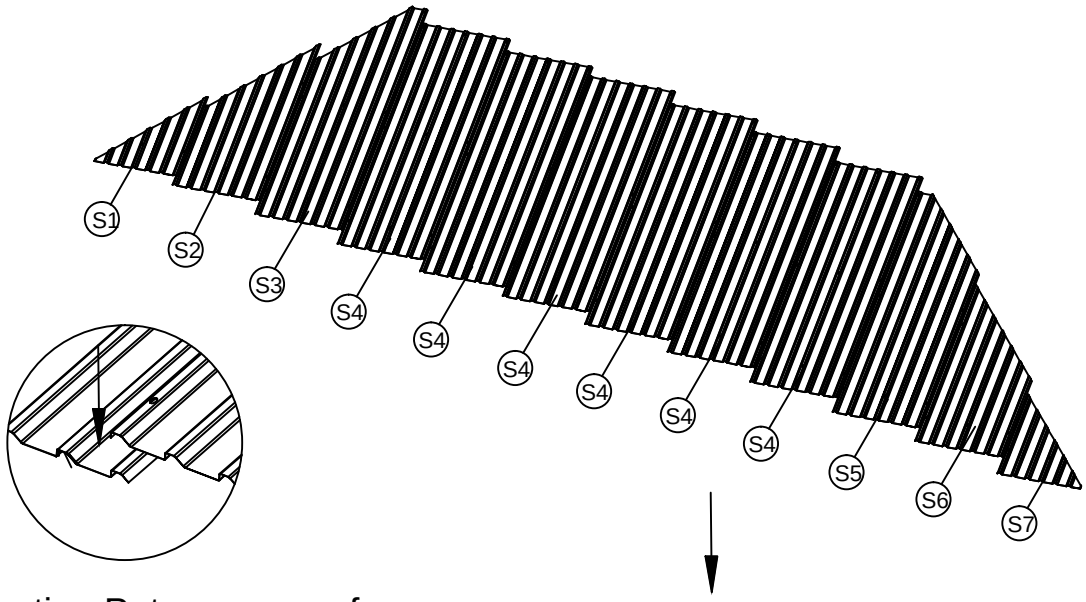

Attention:Put on one roof panel and fasten it accordingly before attaching second roof panel.

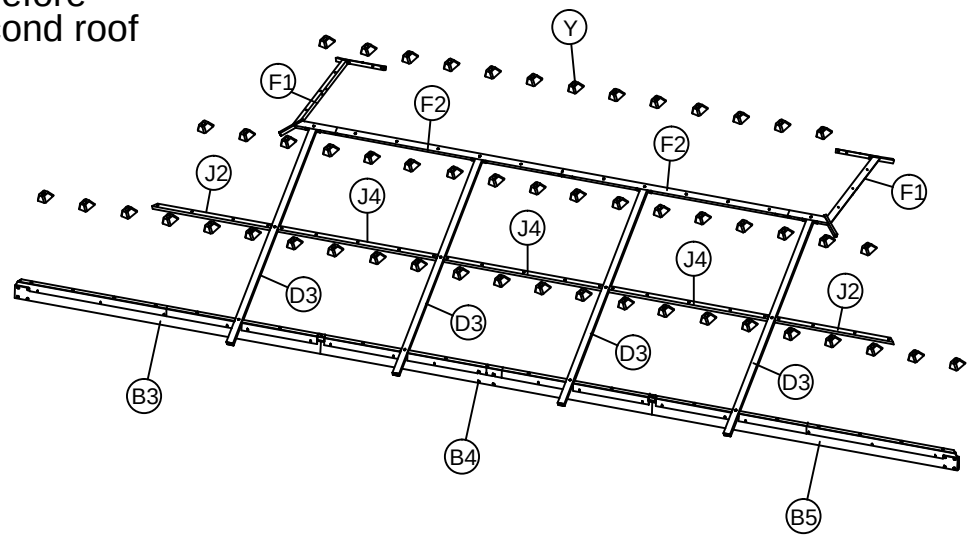

Affix roof panels using screws and spacers (PART Y) as shown in diagram.

<24>

Mind Roof Panel Falling !
Do NOT stand under the roof except the installer with a safety hat !

Short Side View:

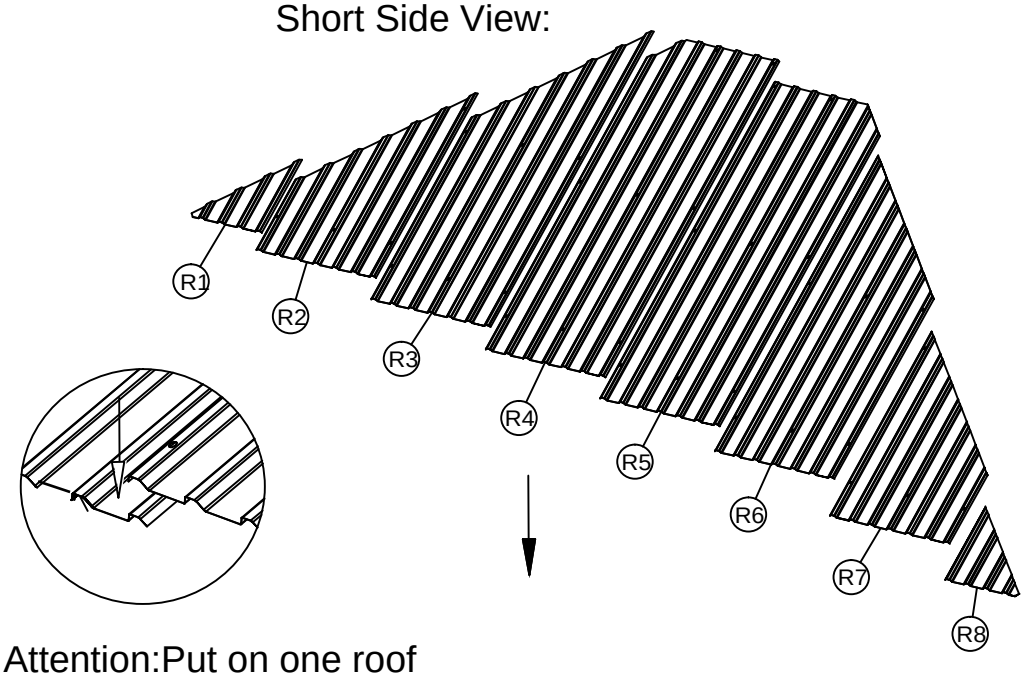

Attention:Put on one roof panel and fasten it accordingly before attaching second roof panel.

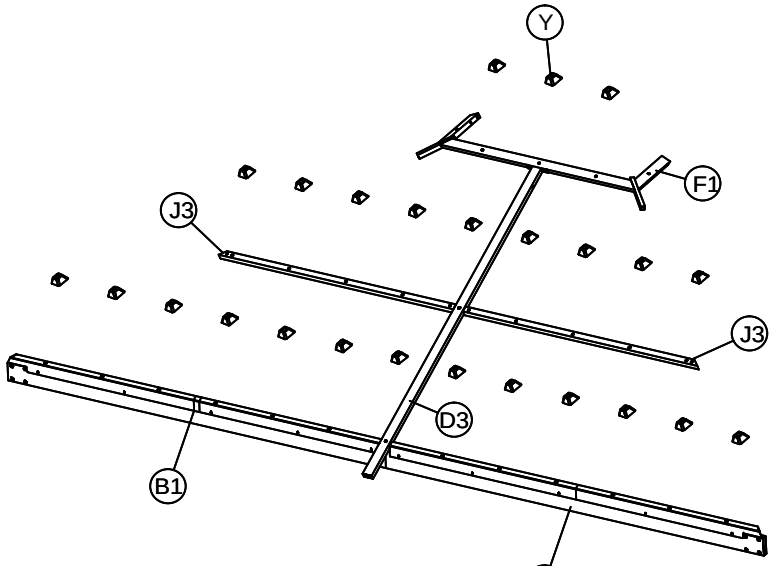

Affix roof panels using screws and spacers (PART Y) as shown in diagram.

<25>

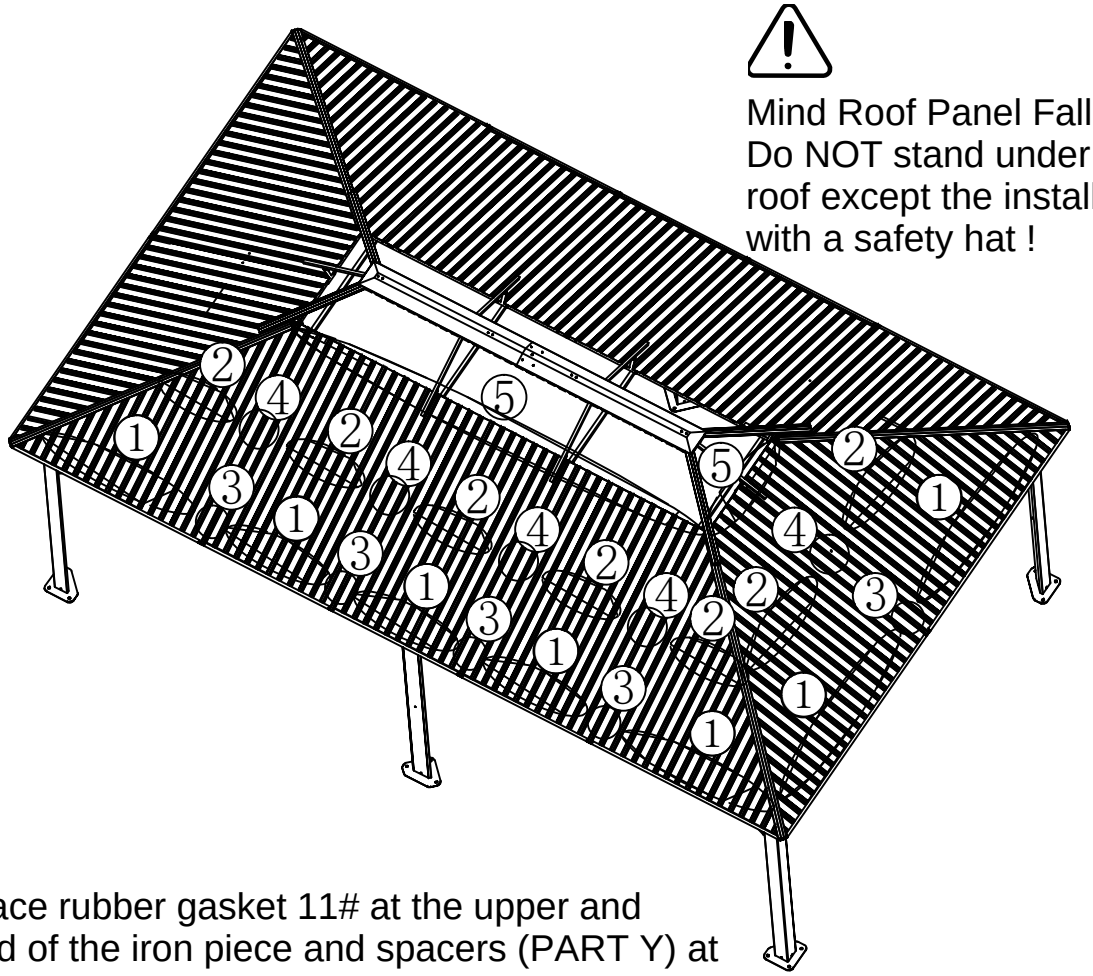

Mind Roof Panel Falling !
Do NOT stand under the roof except the installer with a safety hat !

Place rubber gasket 11# at the upper and end of the iron piece and spacers (PART Y) at the lower section of the iron piece and pass through both with screws as shown in diagram, finally tighten it.

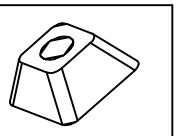

Y 156X



20X



62X

2 M6X22



M6X40

3 32X



M6X45

4 42X



11 156X

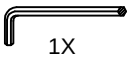

1X

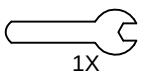

1X

28

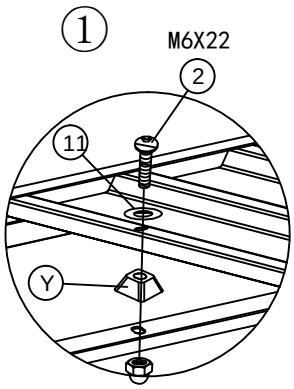

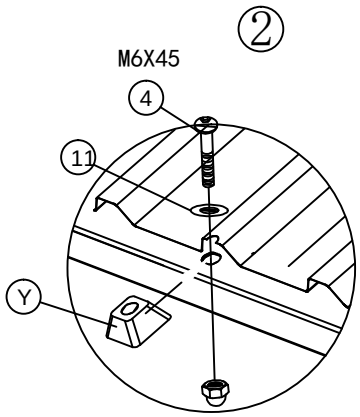

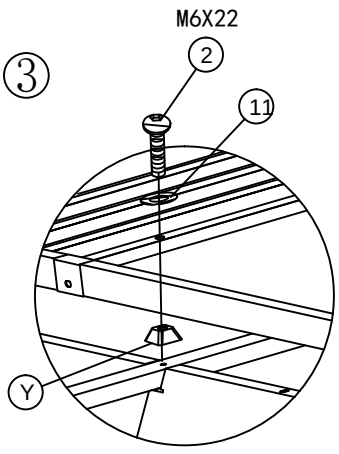

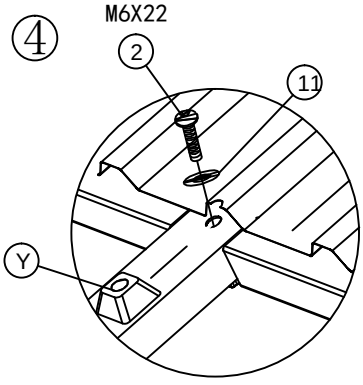

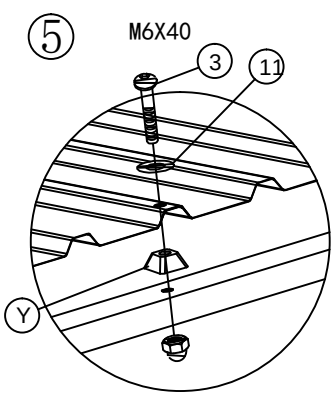

<26>

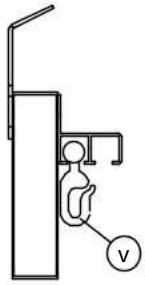

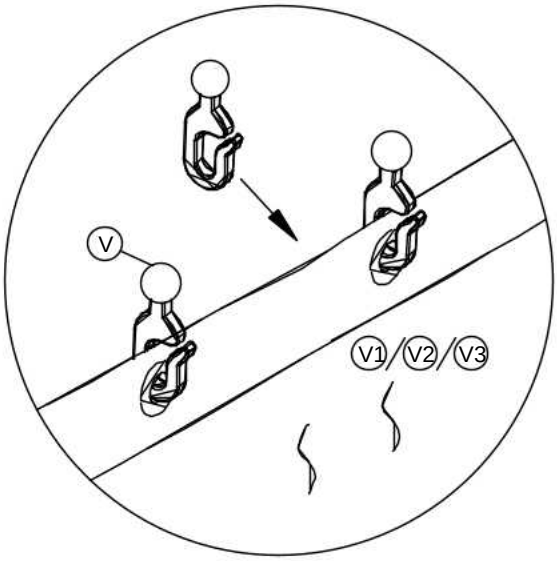

Hang up side curtains (PART V1&V2&V3) as shown in diagram,the other side is the same step.

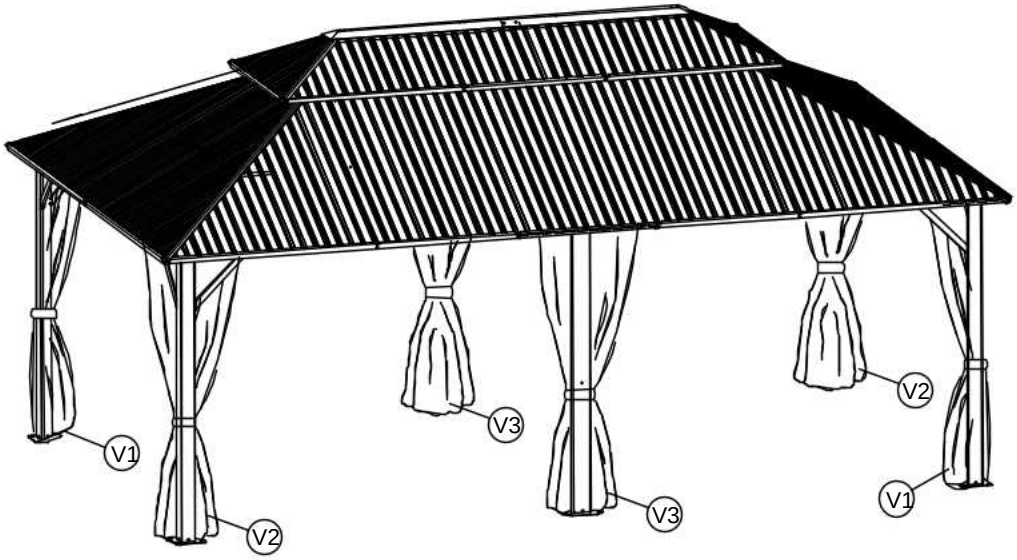

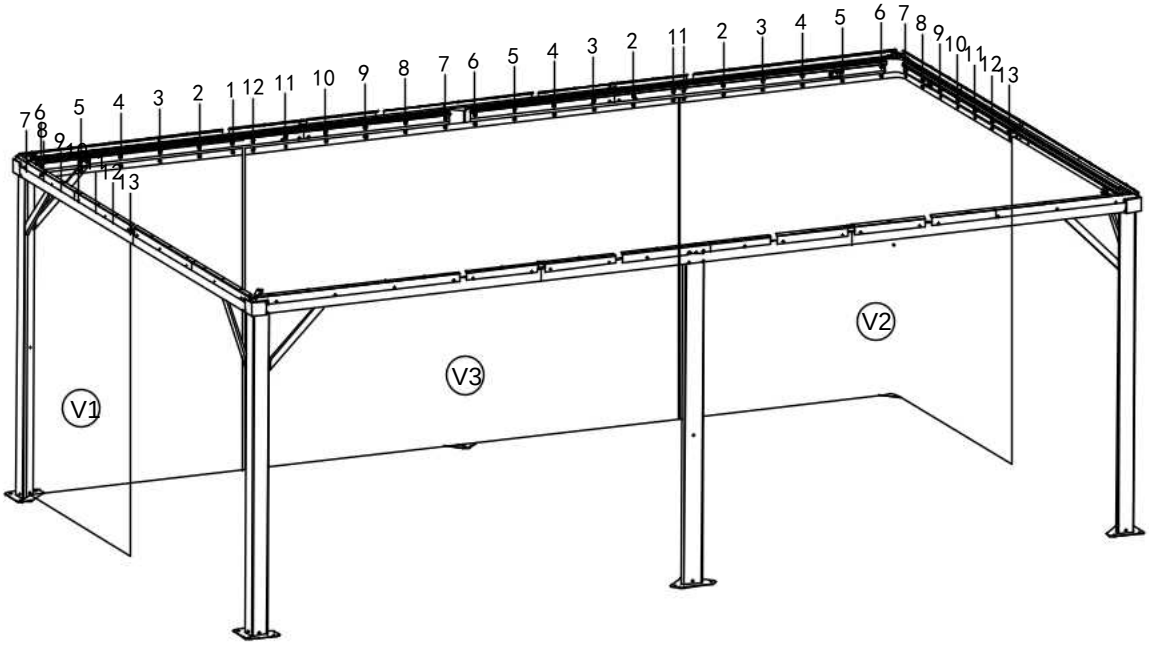

<27>

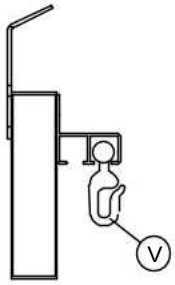

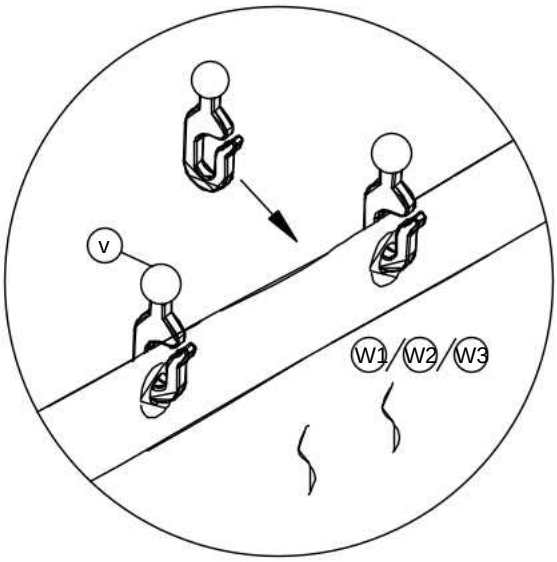

Hang up mosquito sidewalls (PART W1&W2&W3) as shown in diagram,the other side is the same step.

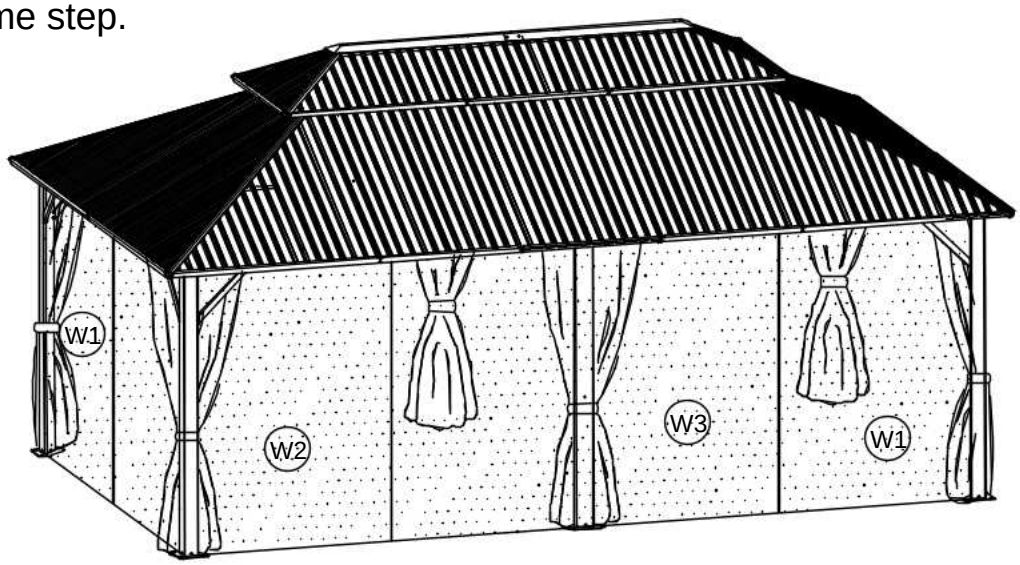

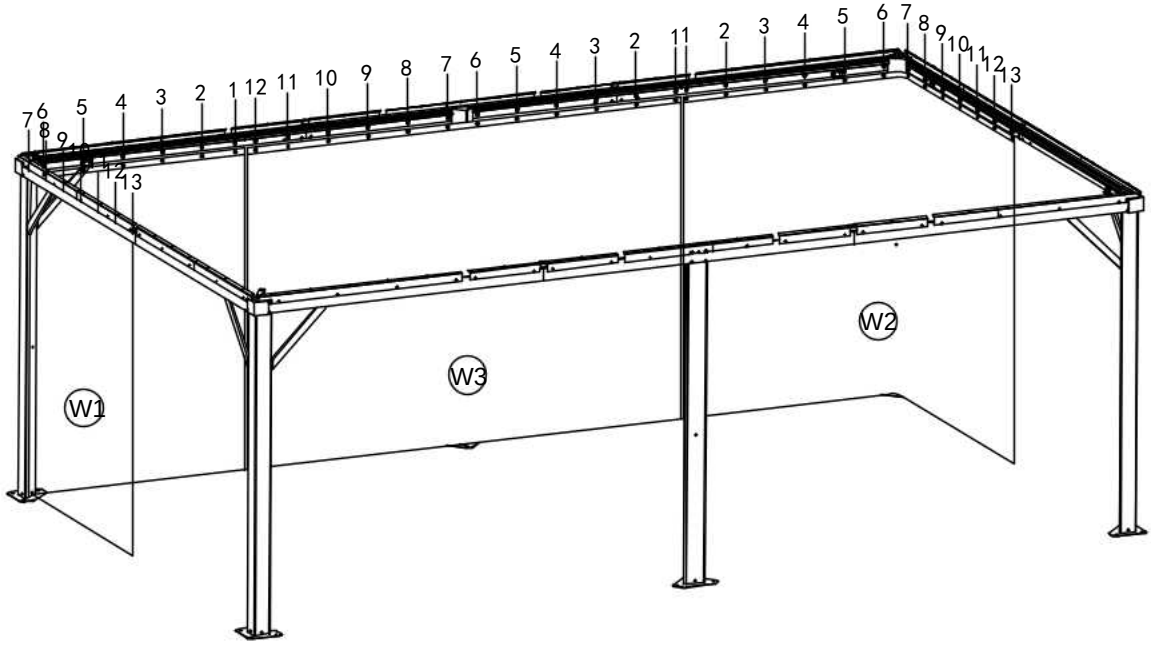

<28>

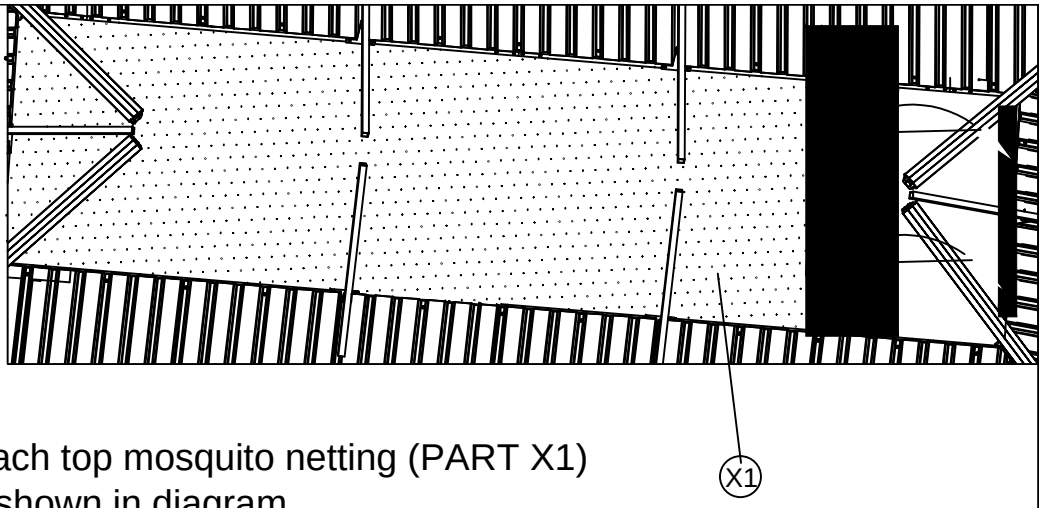

Attach top mosquito netting (PART X1)
as shown in diagram.

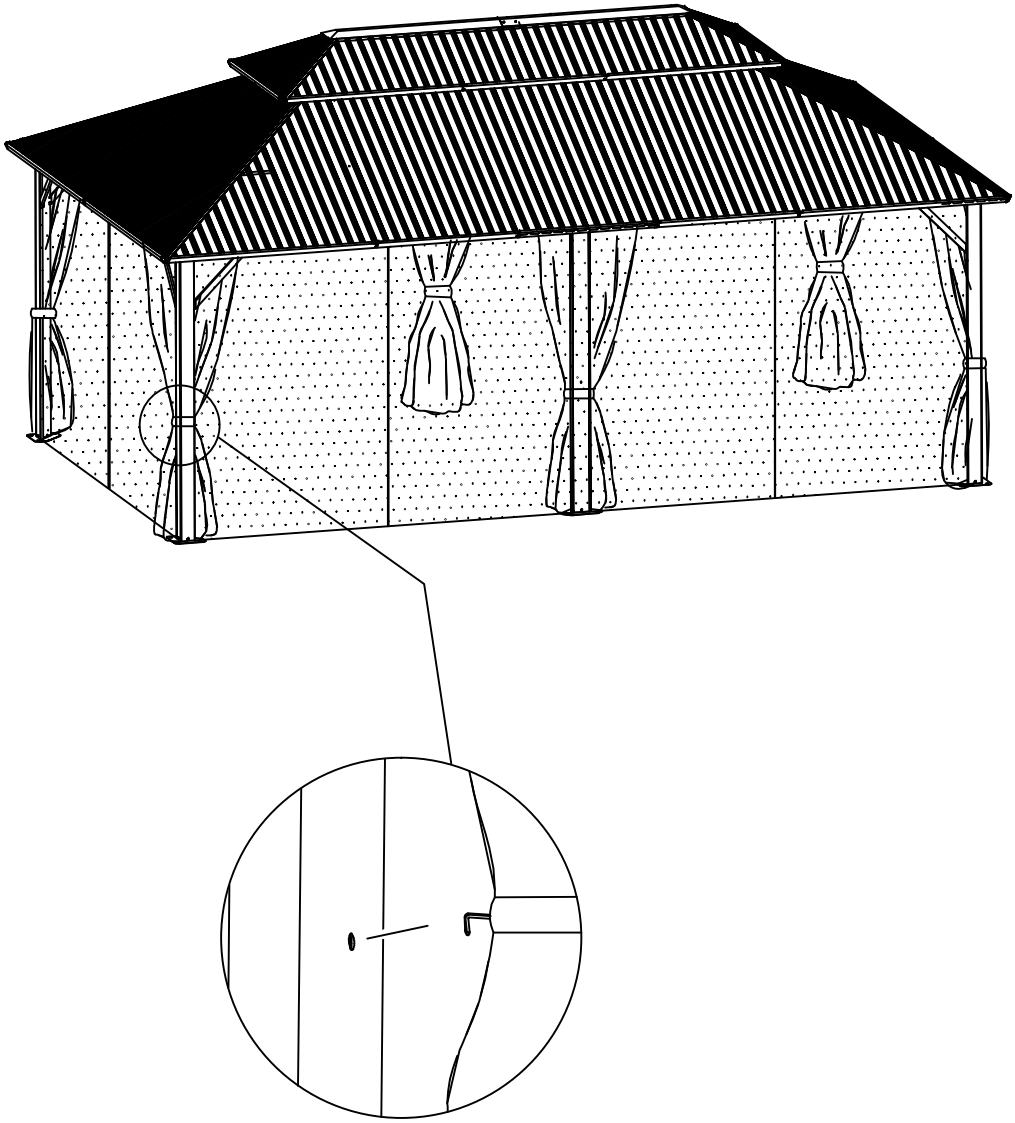



⑫ 18X

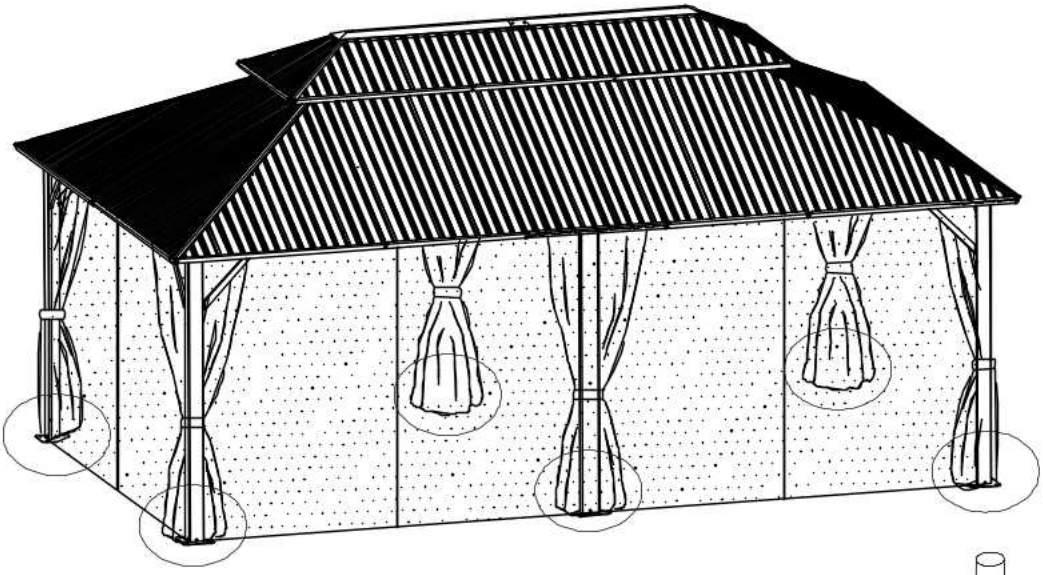

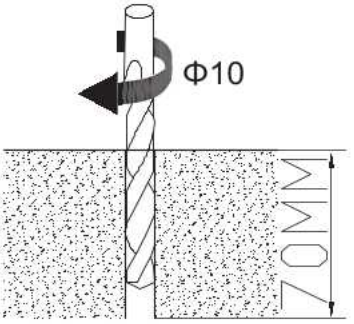

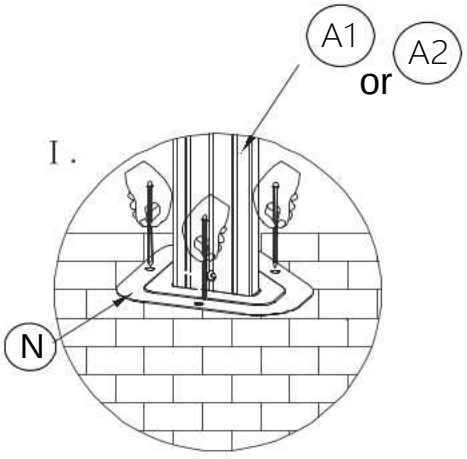

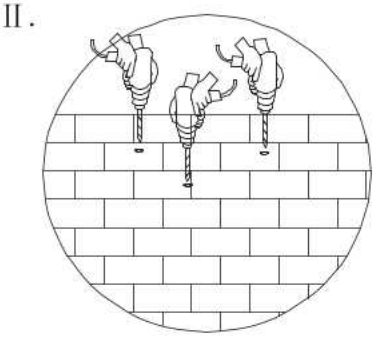

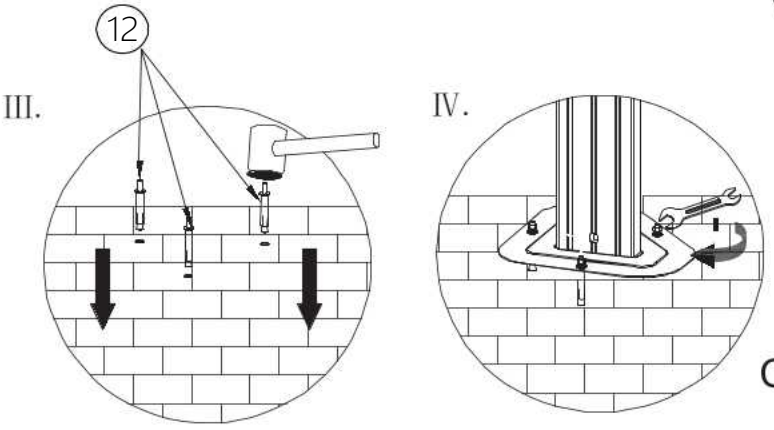

Complete Installation

To improve wind resistance, be sure to complete this installation step. If expansion screws or ground nails are not installed, strong winds may topple the gazebo.
Expansion screws are essential for stability on cement surfaces,and ground nails are for grassy surfaces.
In the end, check all screws are fixed tightly before using.