# Product Manuals

# 3.65 X 6M

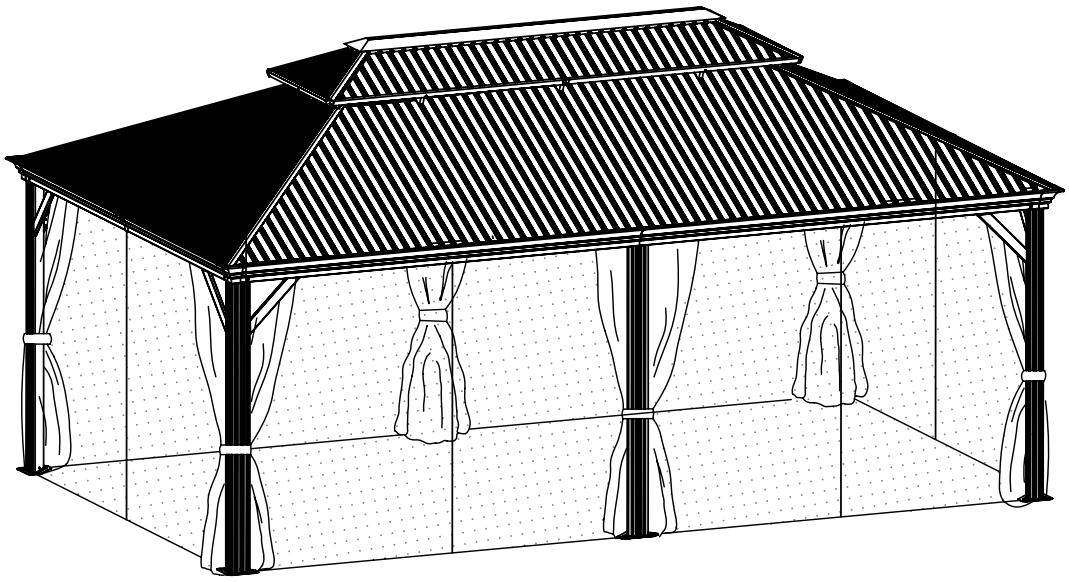



Ⓐ 4X



Ⓐ1 2X

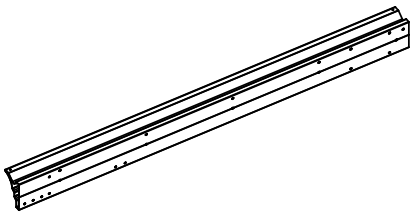

Ⓑ1 2X

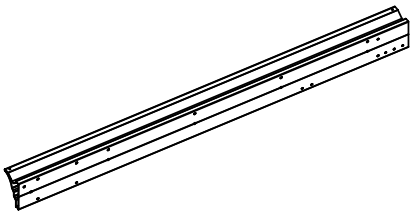

Ⓑ2 2X

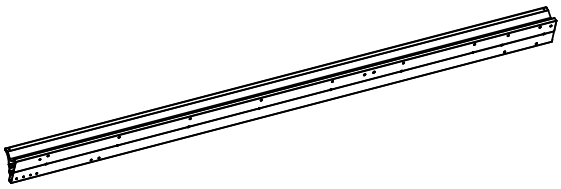

Ⓑ3 2X

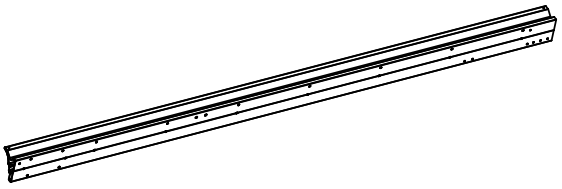

Ⓑ4 2X



Ⓒ1 2X



Ⓒ2 2X



Ⓒ3 2X



Ⓒ4 2X



Ⓒ5 2X



Ⓒ6 2X



Ⓓ1 2X



Ⓓ2 2X



Ⓓ3 2X



Ⓓ4 2X



Ⓔ 4X

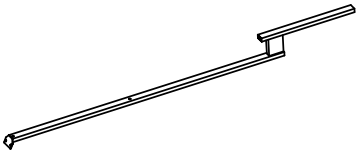

Ⓔ1 6X

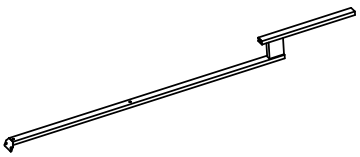

Ⓔ2 2X



Ⓕ 4X

| | | |
|---|---|---|
|  (F1) 4X |  (F2) 4X |  (G1) 2X |
| 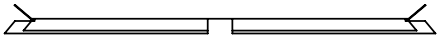 (G2) 2X |  (G3) 2X |  (G4) 2X |
|  (G5) 2X |  (G6) 2X | 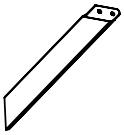 (H1) 4X |
| 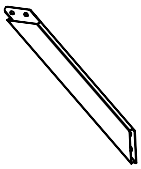 (H2) 4X | 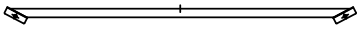 (H3) 3X | 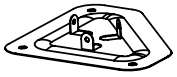 (J) 6X |
| 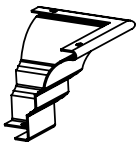 (K) 4X | 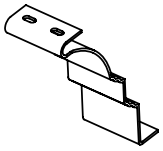 (K1) 4X |  (L1) 1X |
|  (L2) 1X | 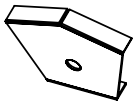 (M) 8X | 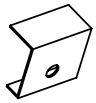 (M1) 2X |
| 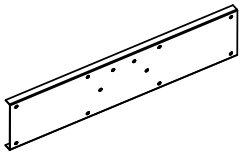 (N) 4X | 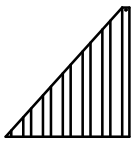 (01) 2X | 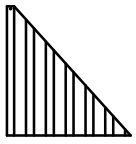 (02) 2X |
| 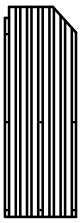 (P1) 2X | 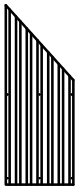 (P2) 2X | 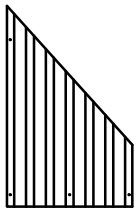 (P3) 2X |
| 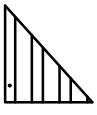 (P4) 2X | 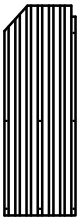 (P5) 2X | 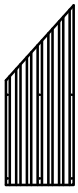 (P6) 2X |

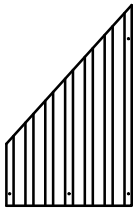

(P7) 2X

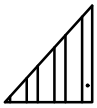

(P8) 2X

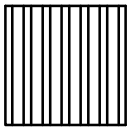

(Q1) 8X

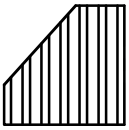

(Q2) 2X



(Q3) 2X

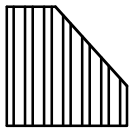

(Q4) 2X



(Q5) 2X

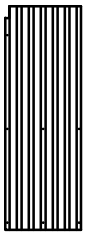

(R1) 6X

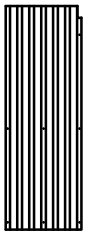

(R2) 6X

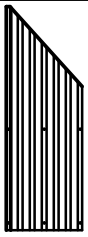

(R3) 2X

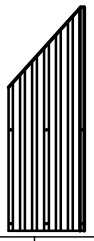

(R4) 2X

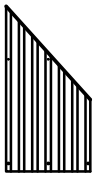

(R5) 2X

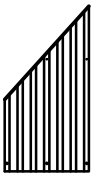

(R6) 2X



(R7) 2X



(R8) 2X

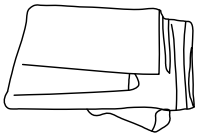

(S) 4X+2X

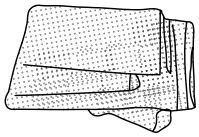

(S1) 4X+1X



(U) 176X



(V) 4X

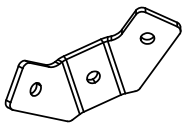

(W) 4X



(X) 8X

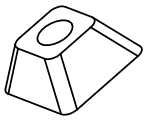

(Y) 132X



(1) 305X M6X15

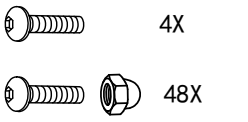


(2) 10X+64X M6X20

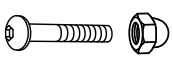

(3) 14X M6X40

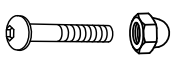

(4) 44X M6X45



(5) 8X



(6) 4X M5X12



(7) 24X ST4.8X12



(8) 6X M6X52



(9) 3X

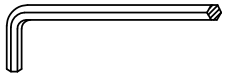

1X

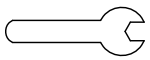

1X



(A) 4X



(A1) 2X



(J) 6X



M6X15

(1) 18X



<1>

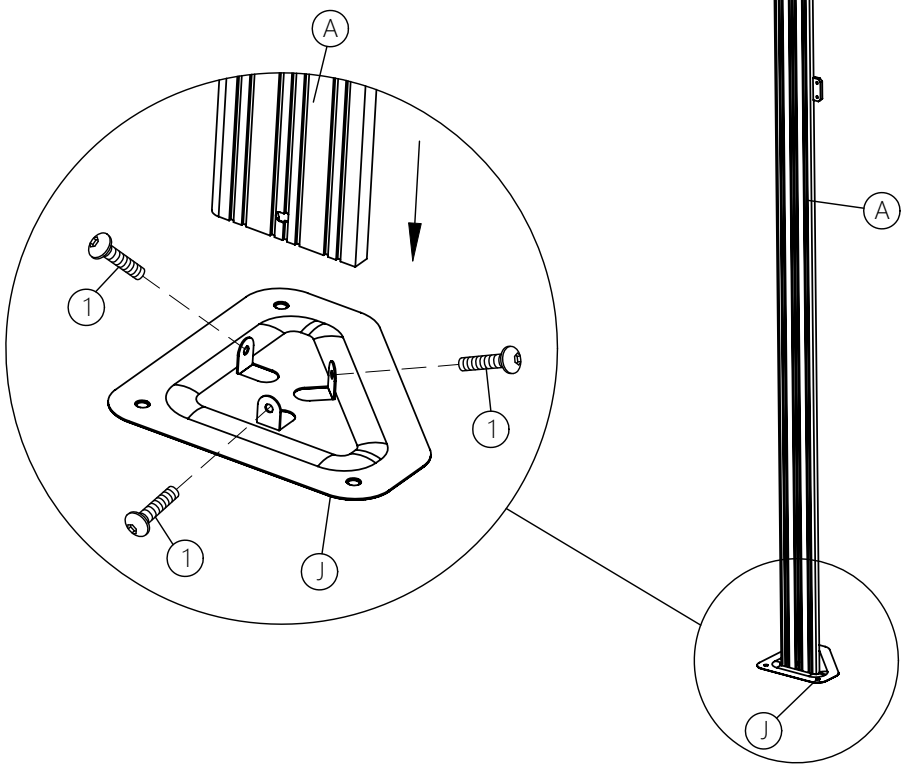


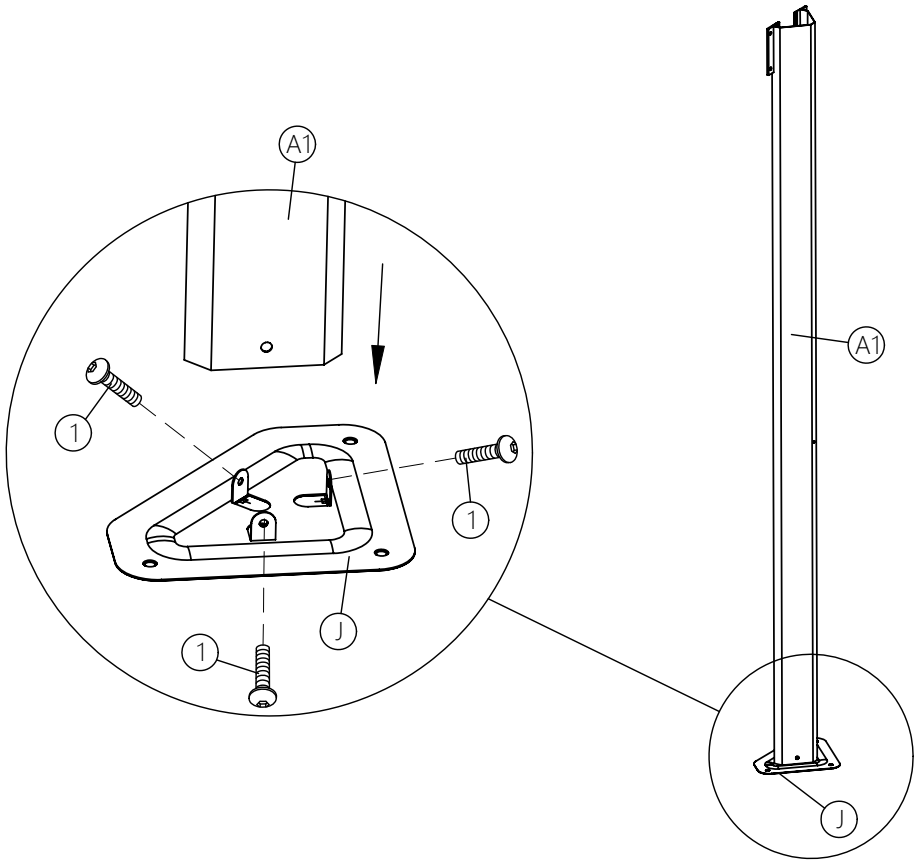

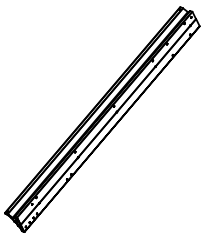

(B1) 2X

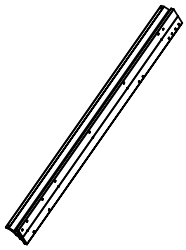

(B2) 2X



(C1) 2X



(C2) 2X

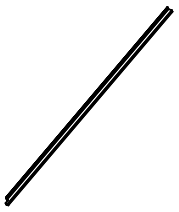

(D1) 2X

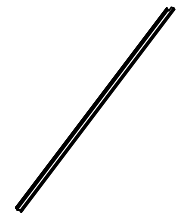

(D2) 2X

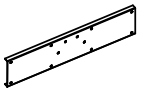

(N) 2X



M6X15

(1) 52X



# <2>

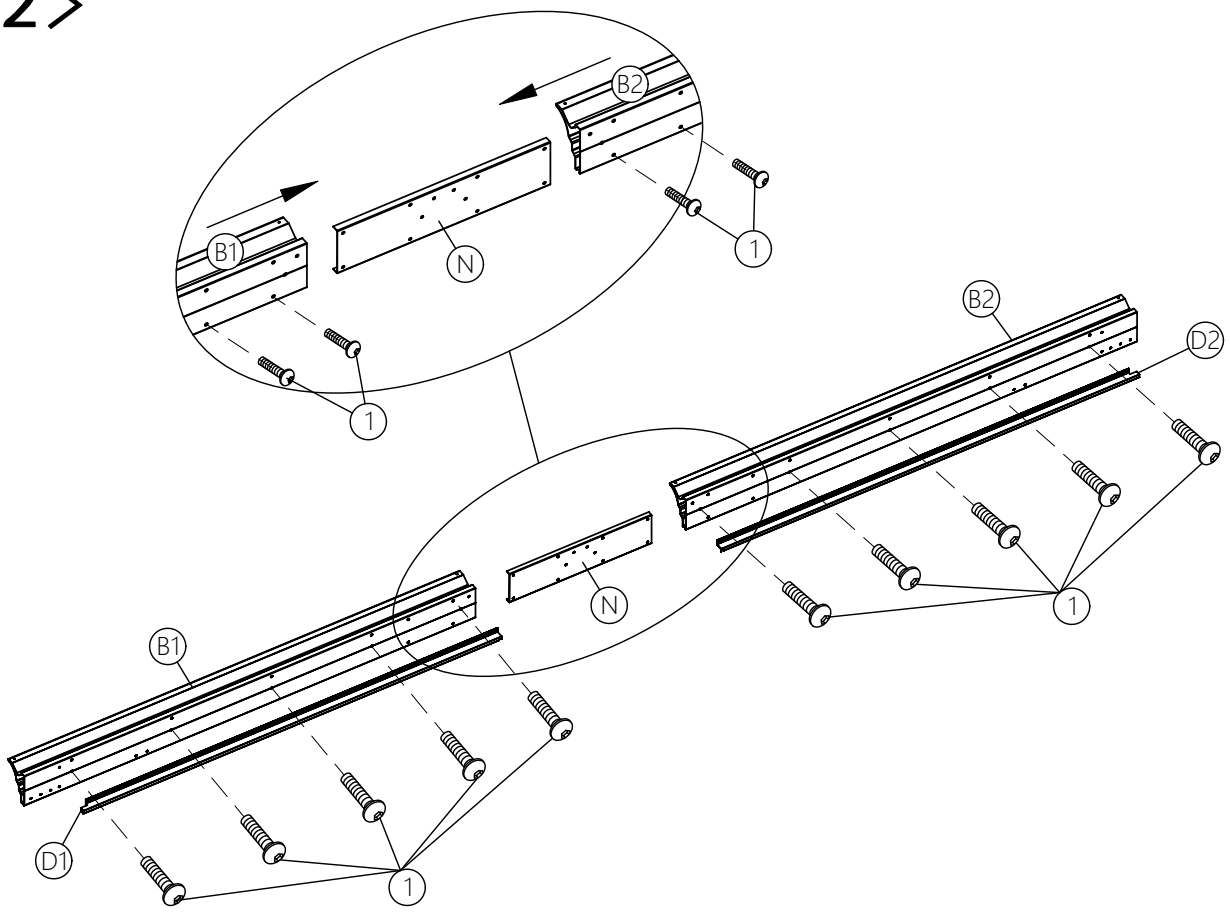


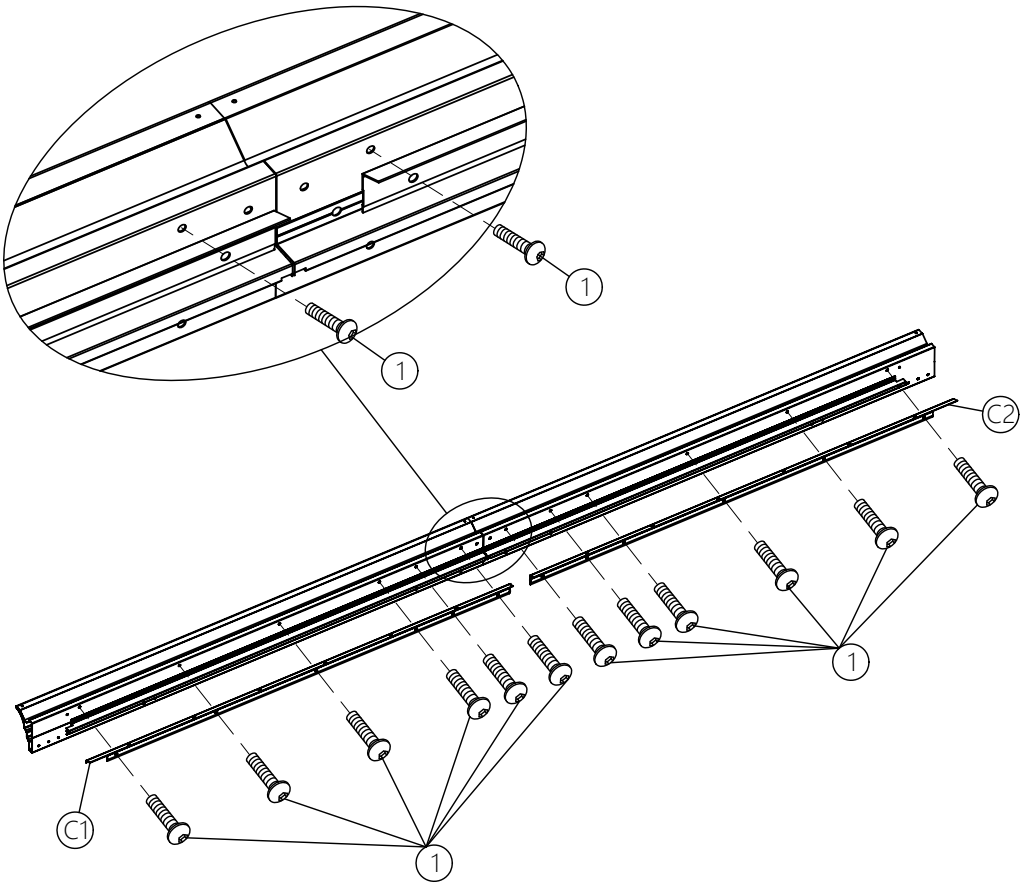

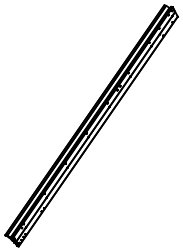

B3 2X

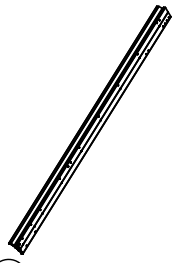

B4 2X

C3 2X

C4 2X

C5 2X

C6 2X



D3 2X



D4 2X

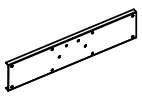

N 2X



M6X15

1 72X



# <3>

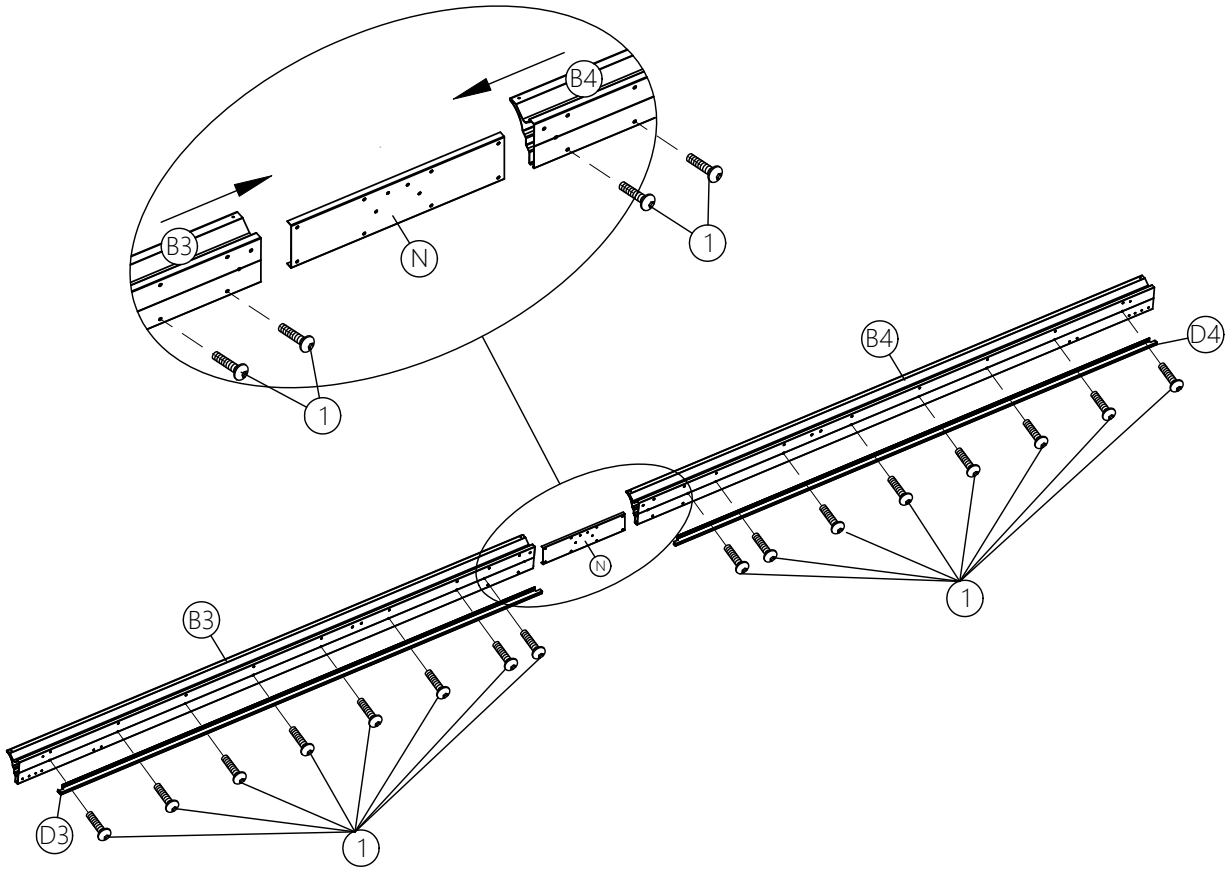


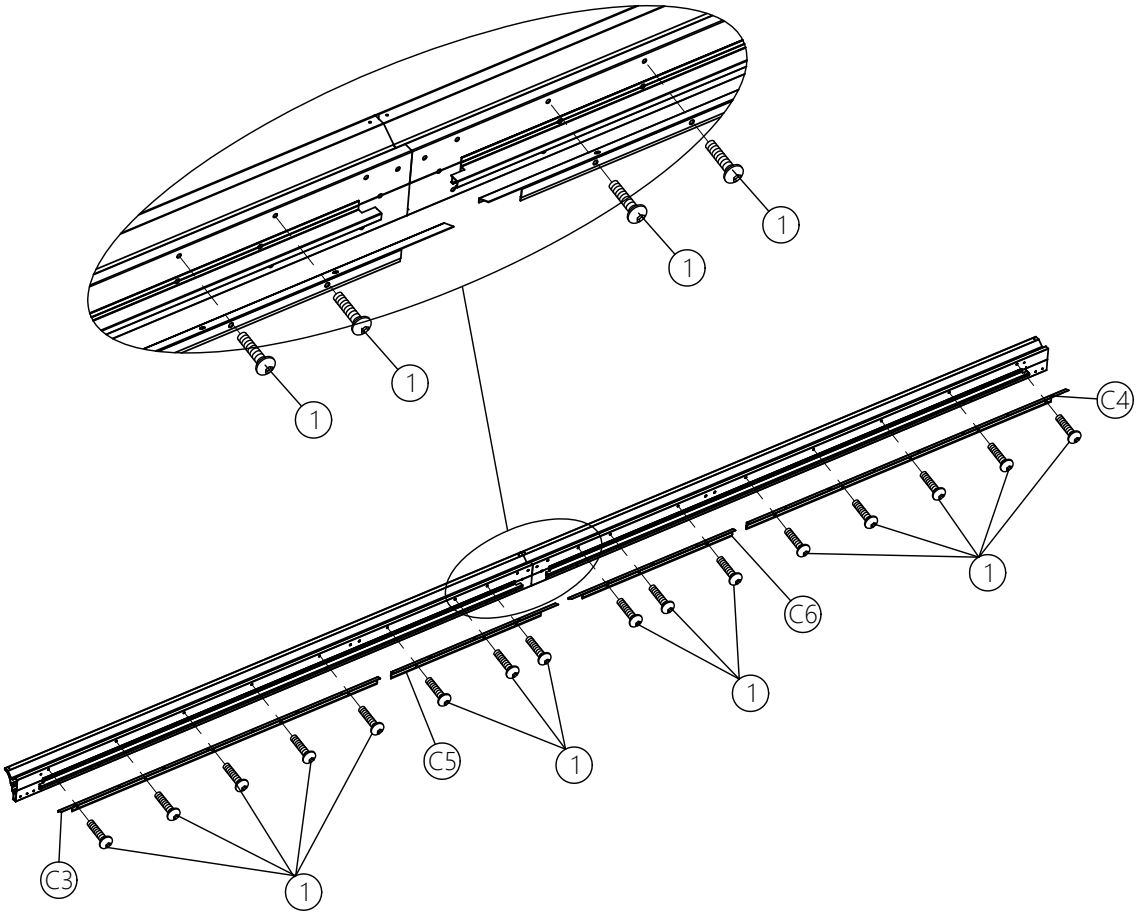

# <4>



M6X15

① 24X



⑤ 8X

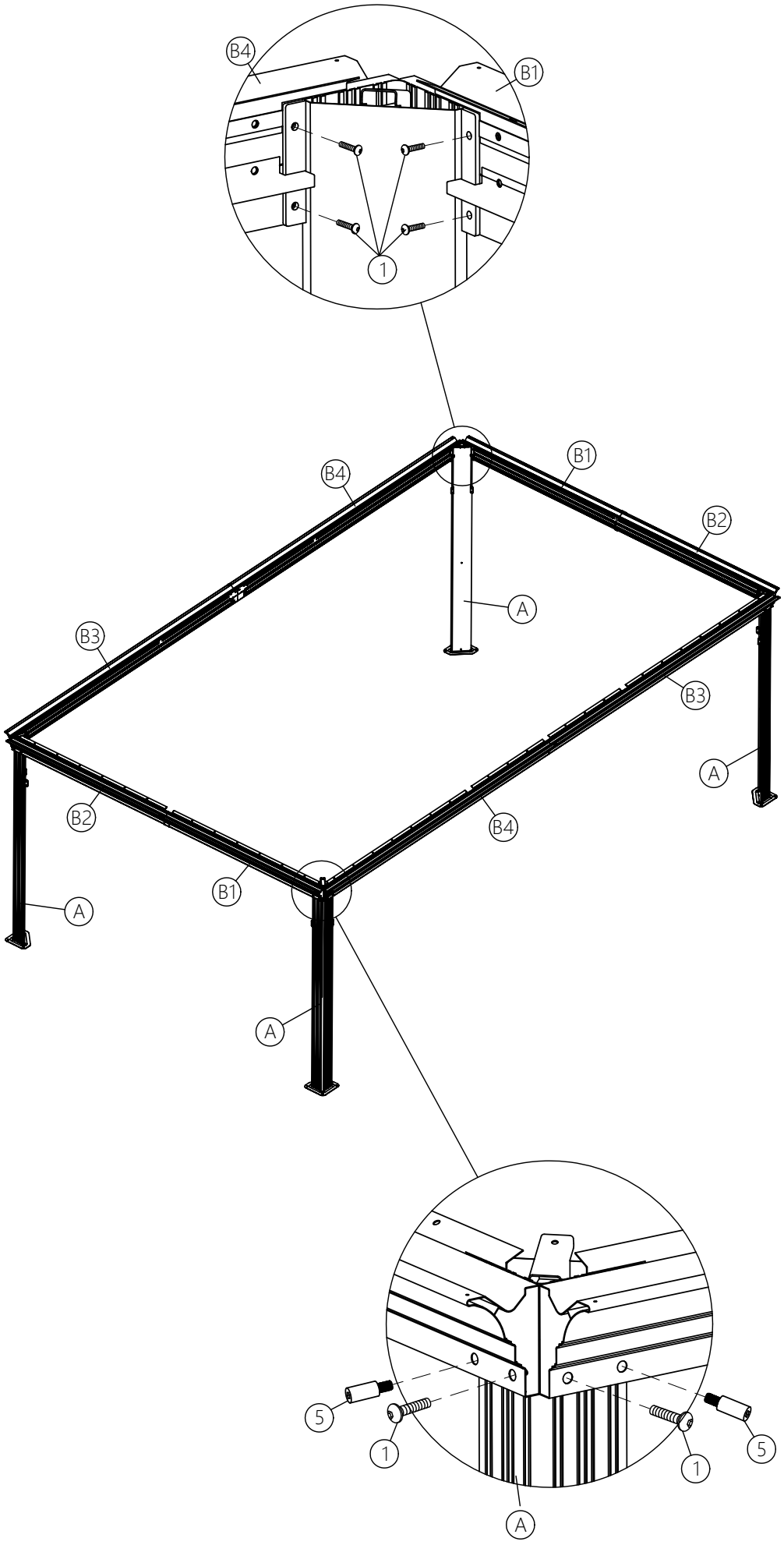

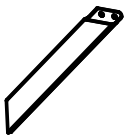

H1 4X

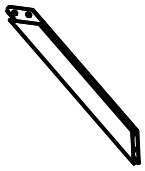

H2 4X



M6X15

1 32X

# <5>

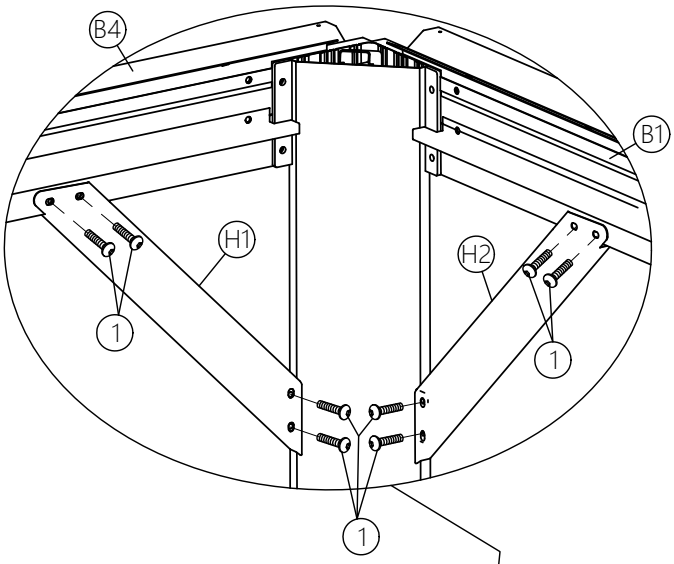


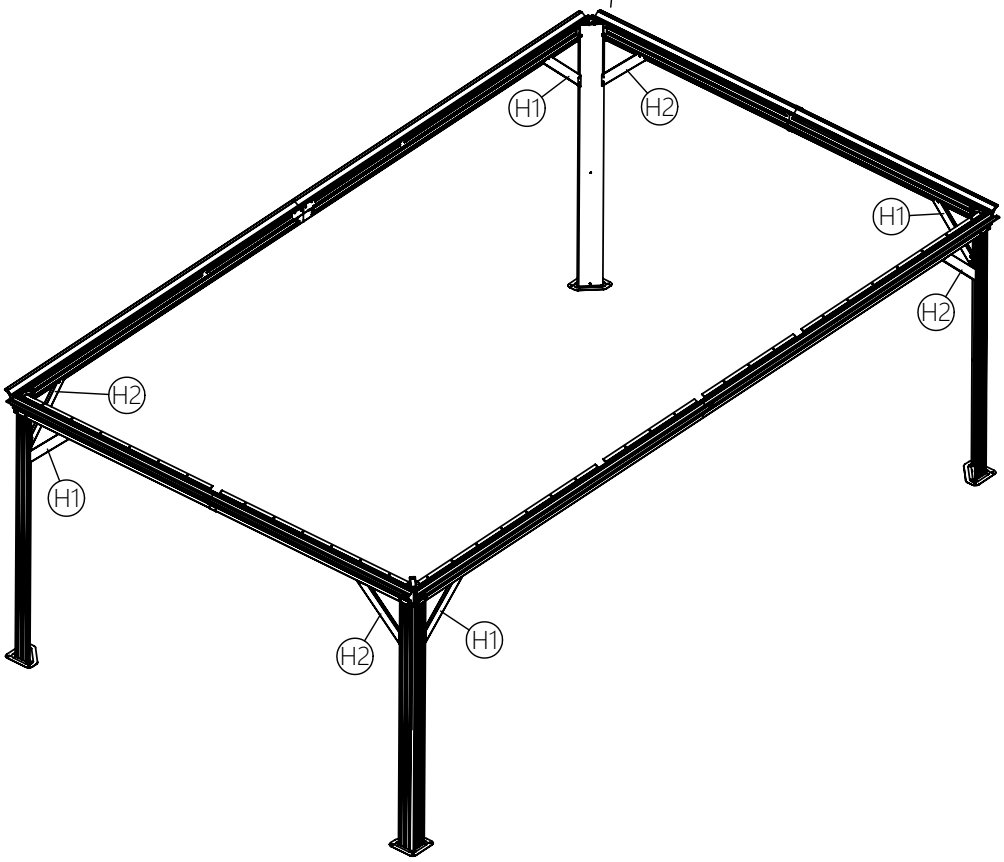

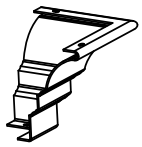

K 4X

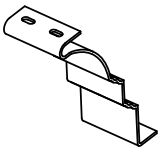

K1 4X



U 176X



V 4X



M5X15

6 4X



ST4. 8X12

7 24X



# <6>

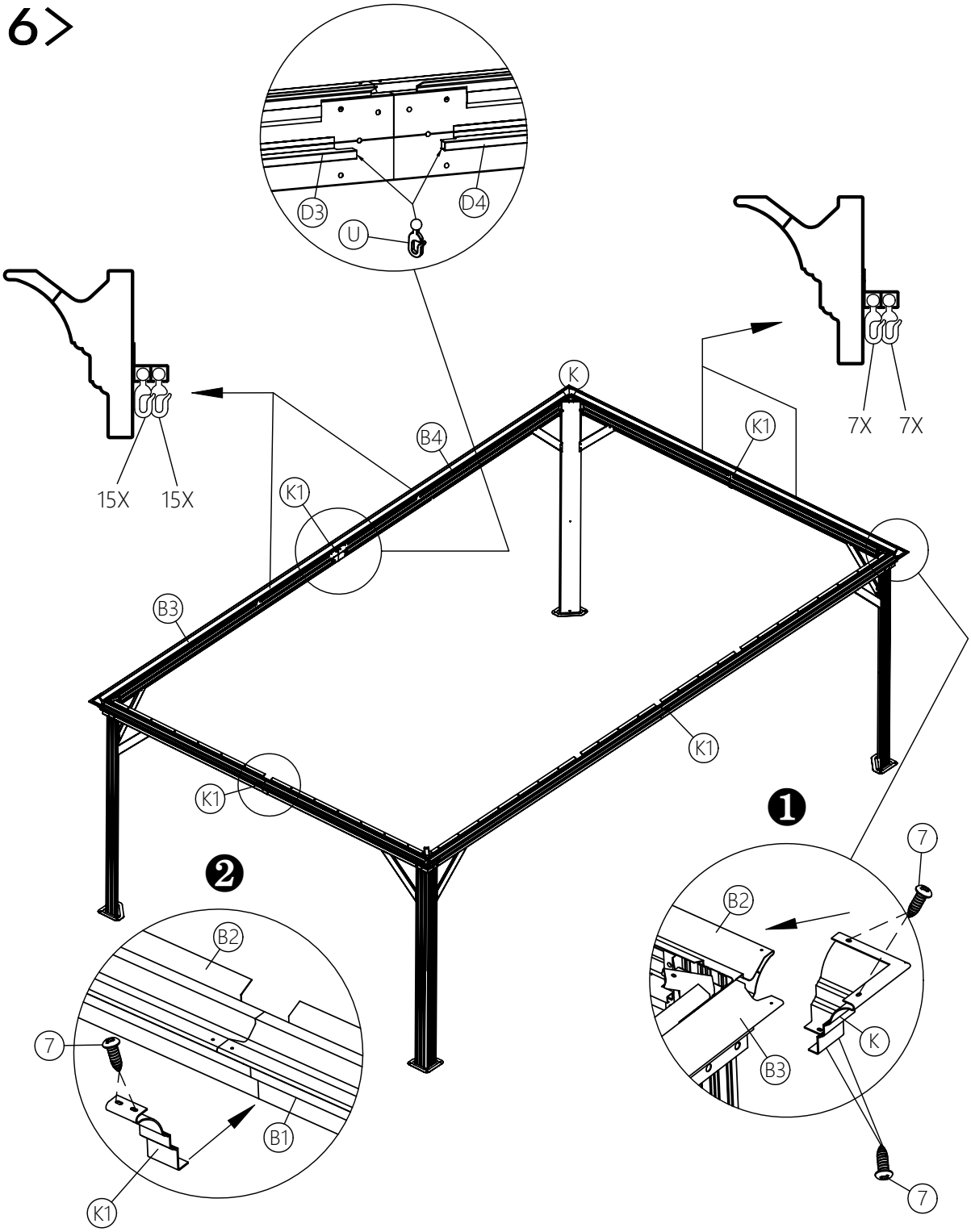

<7>

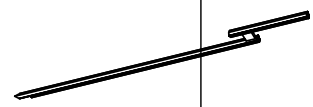

E 4X

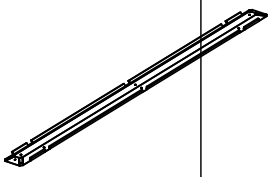

L1 1X



M6X15

1 12X

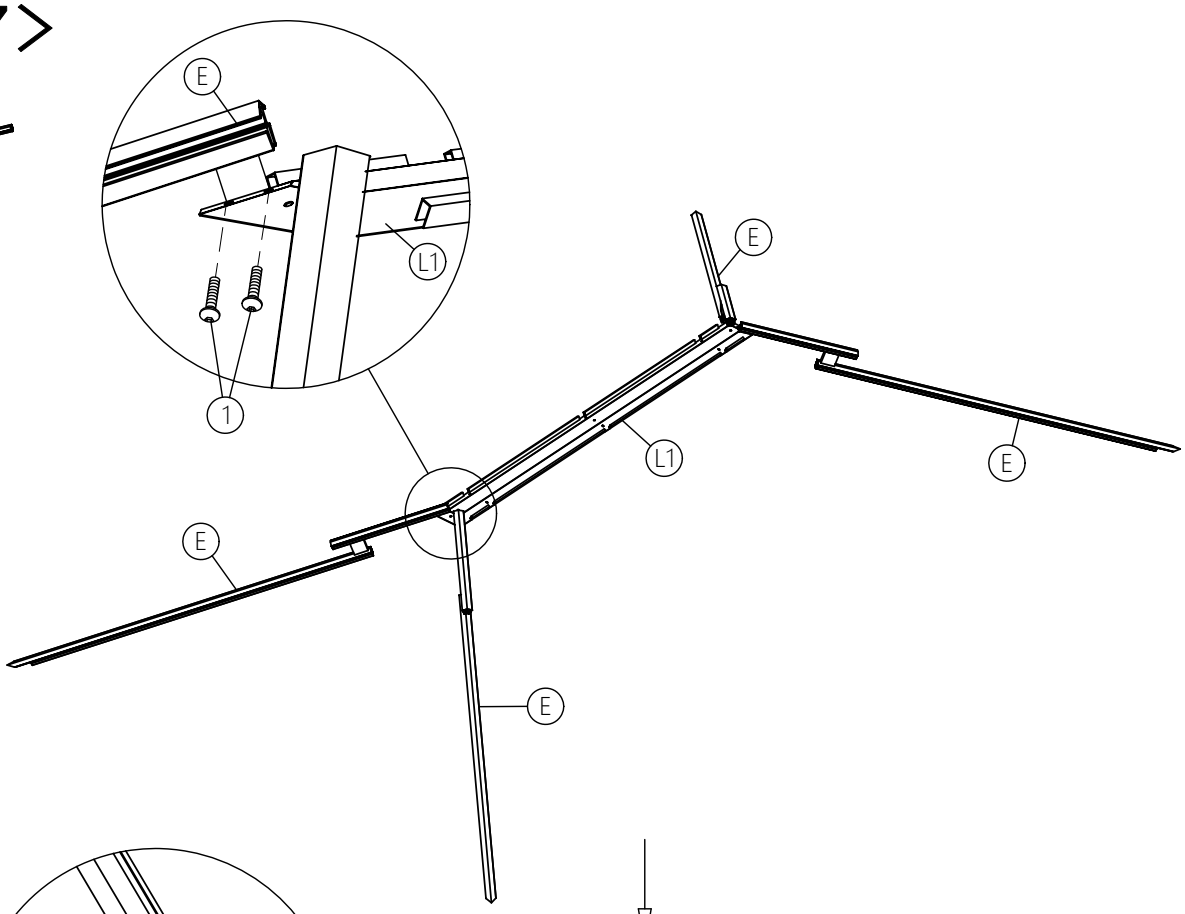


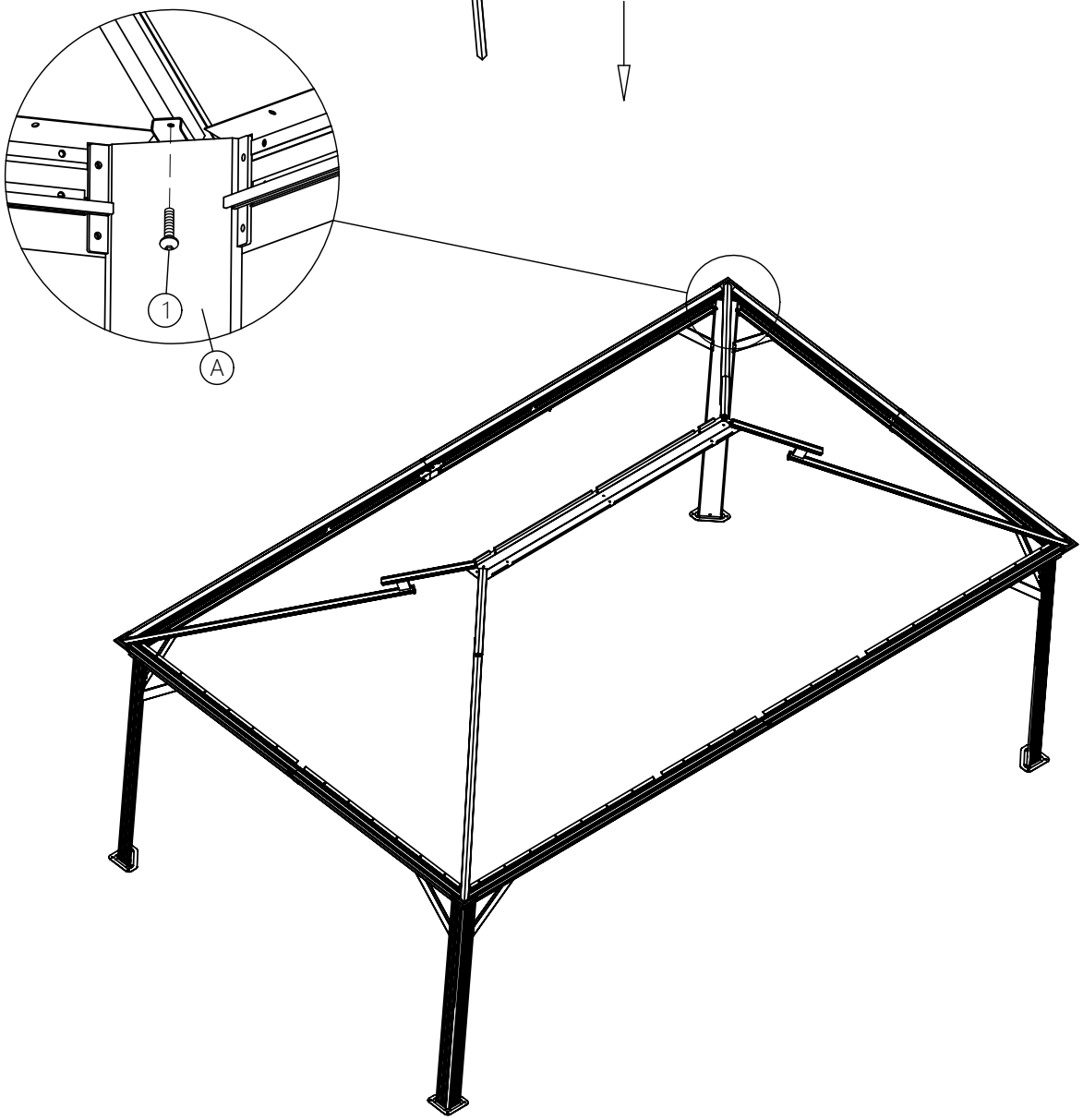

# <8>

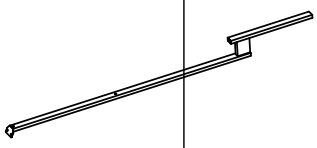

(E1) 6X

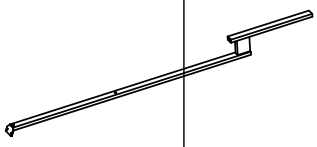

(E2) 2X



M6X15

(1) 24X

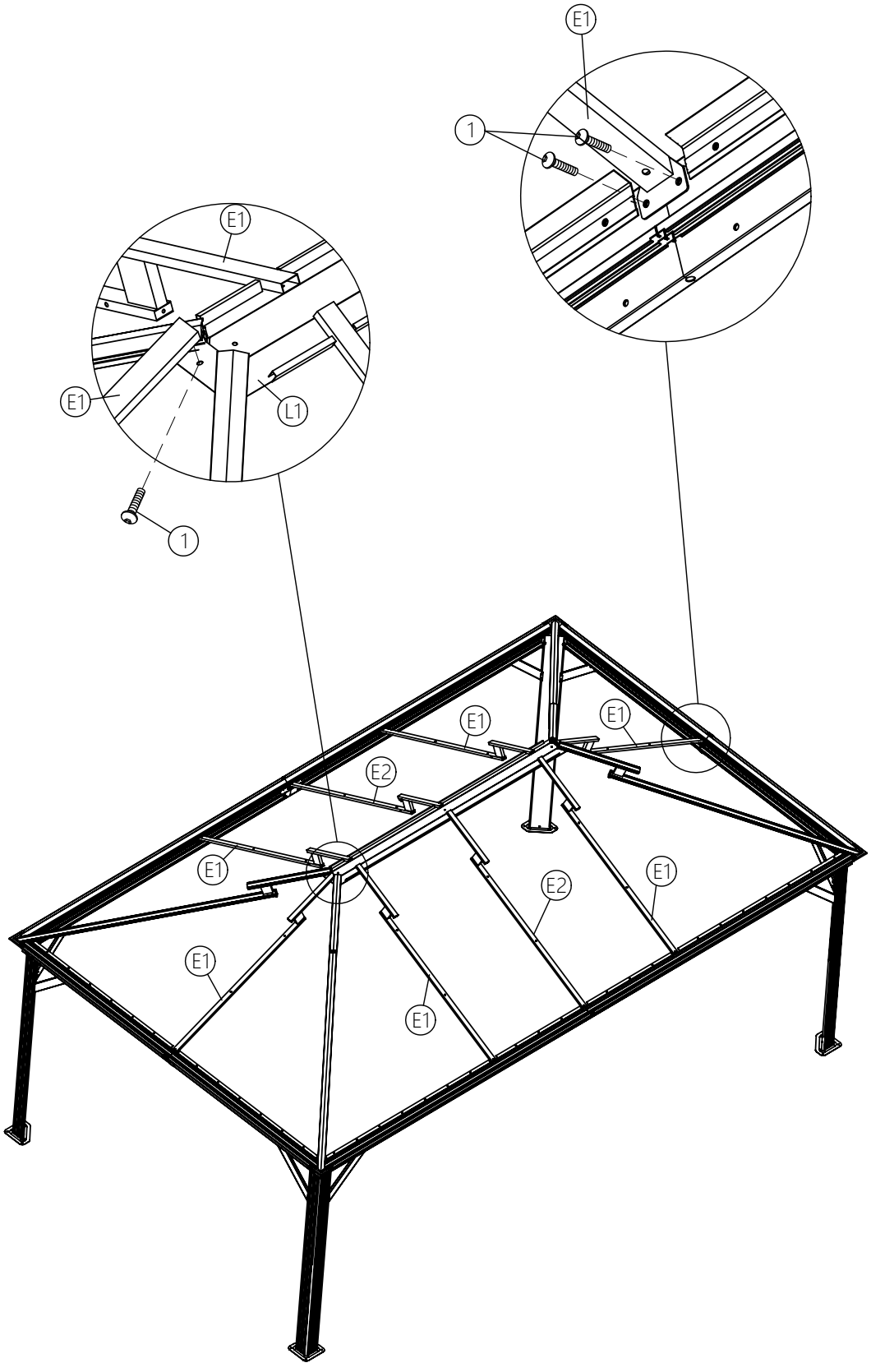

# <9>

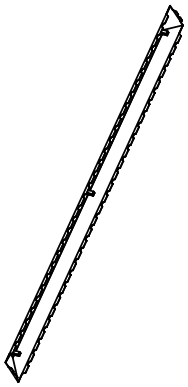

L2 1X



A1 2X



M6X15

1 11X

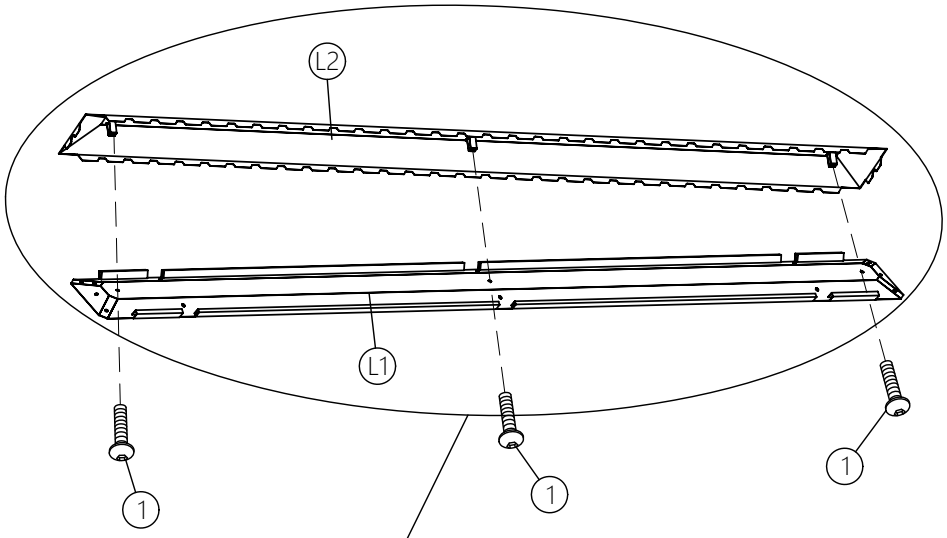


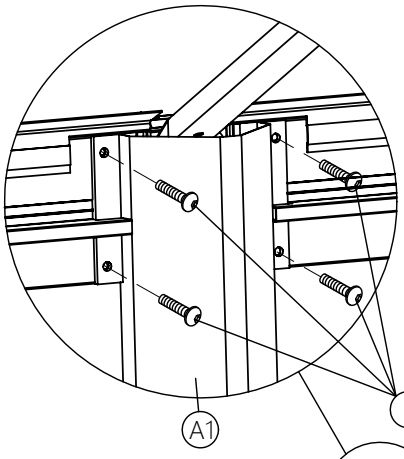


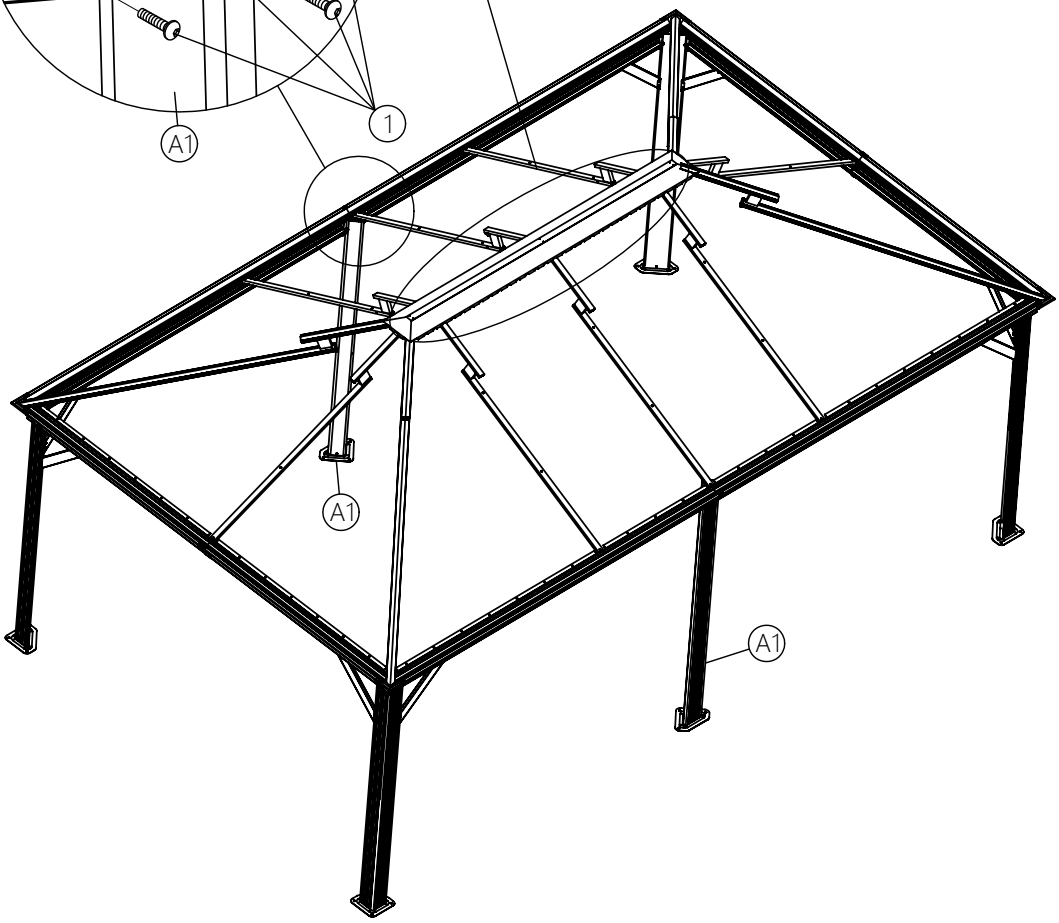

<10>

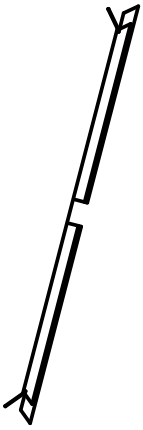

G2 4X

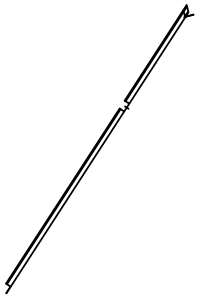

G3 2X

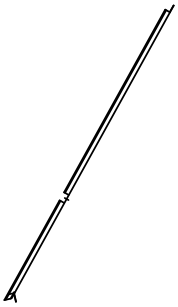

G4 2X

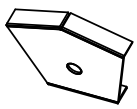

M 4X



M6X15

1 12X

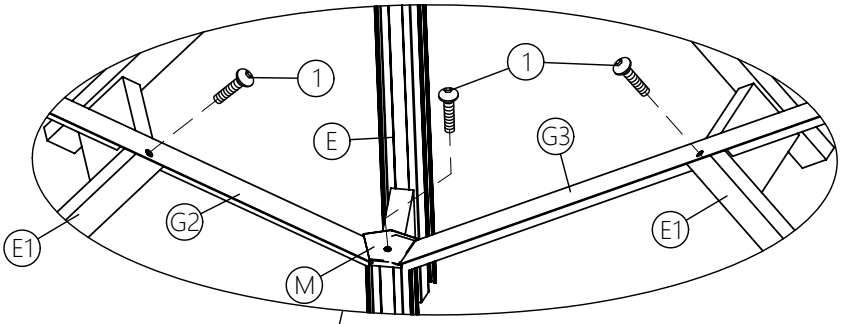


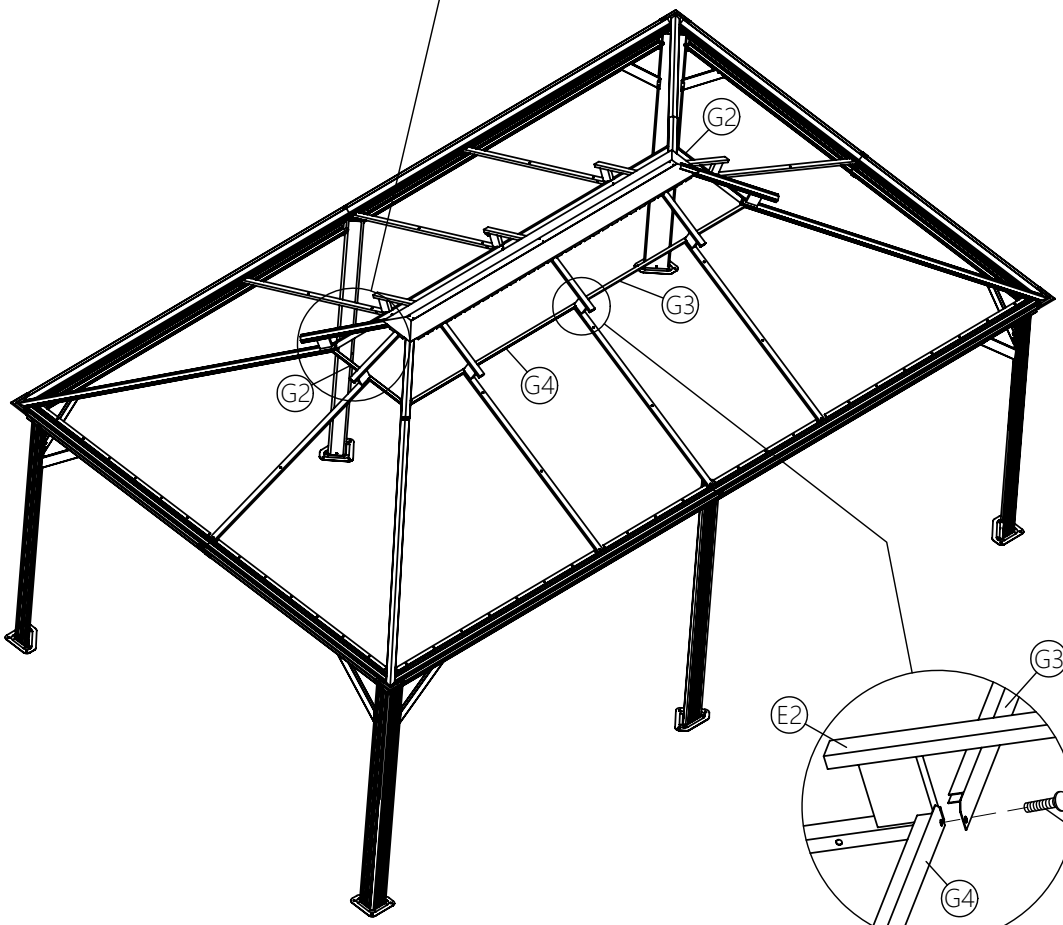





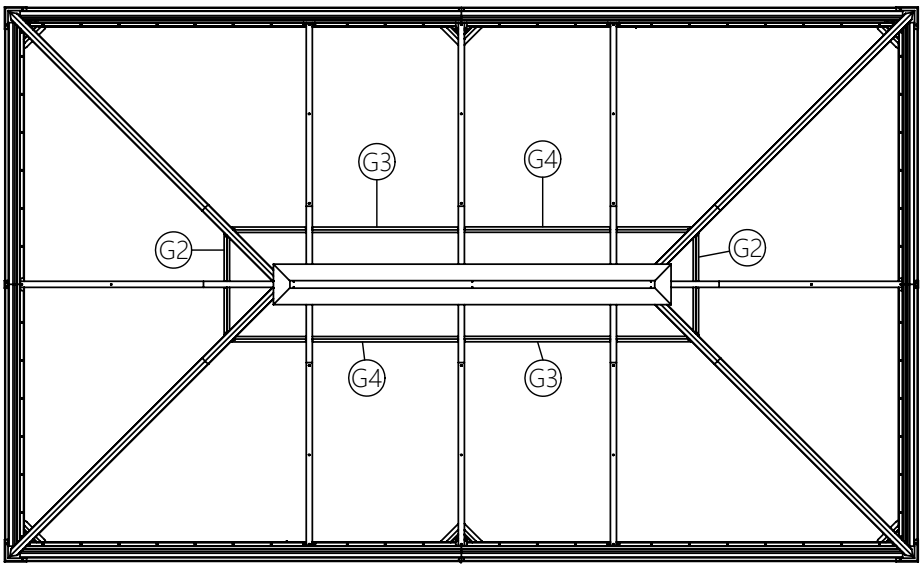

# <11>

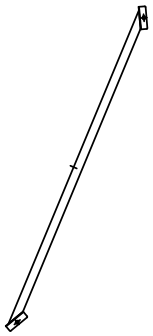

H3 3X

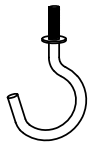

9 3X



M6X52

8 6X

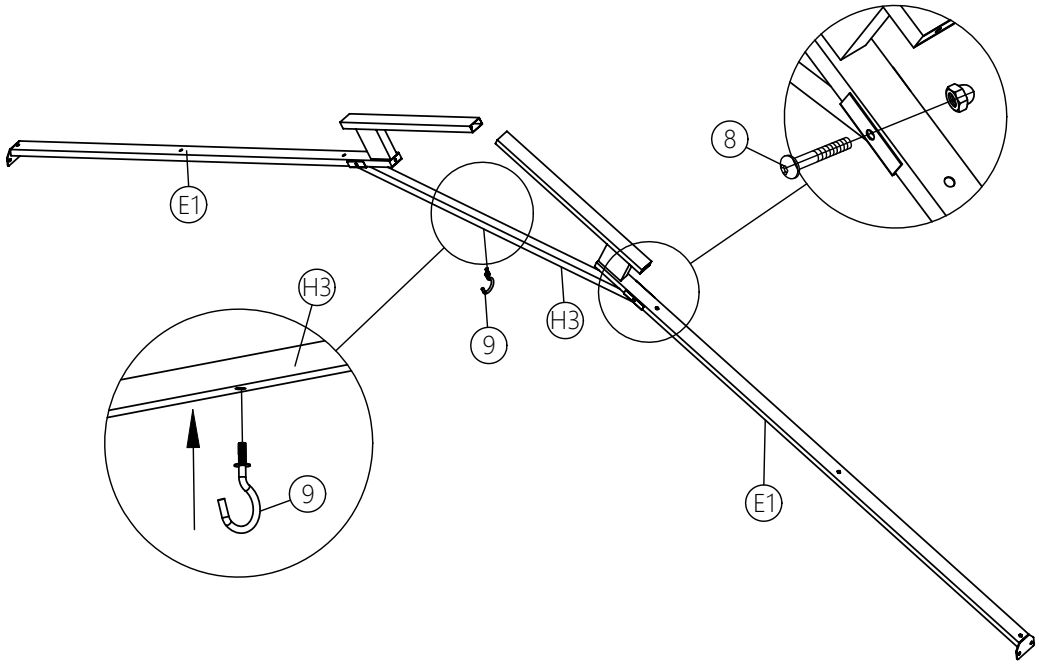


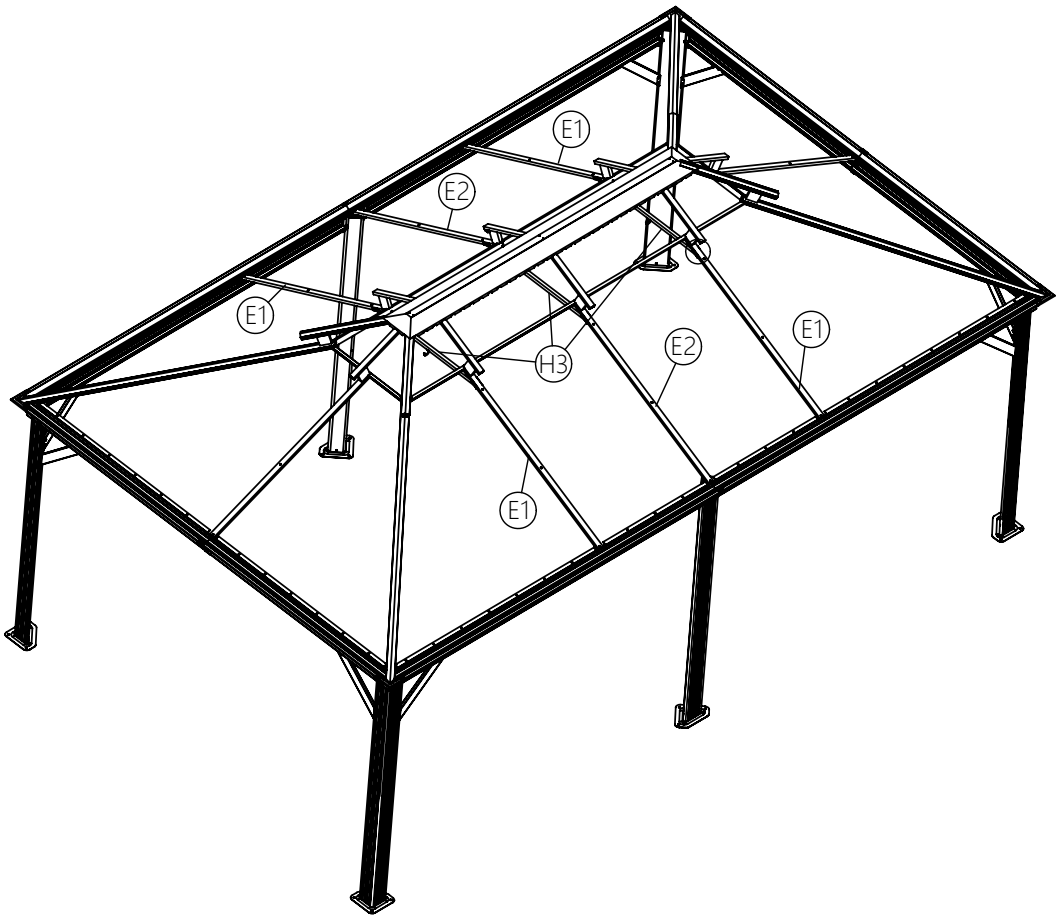

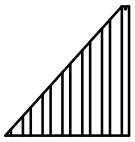

01 2X

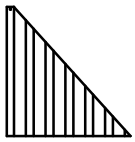

02 2X

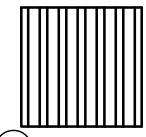

Q1 8X

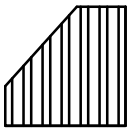

Q2 2X



Q3 2X

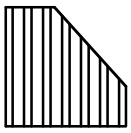

Q4 2X



Q5 2X

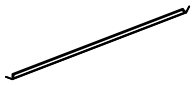

G1 2X

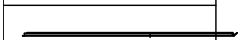

G5 2X



G6 2X



M 4X

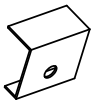

M1 2X



M6X15

1 12X

# <12>

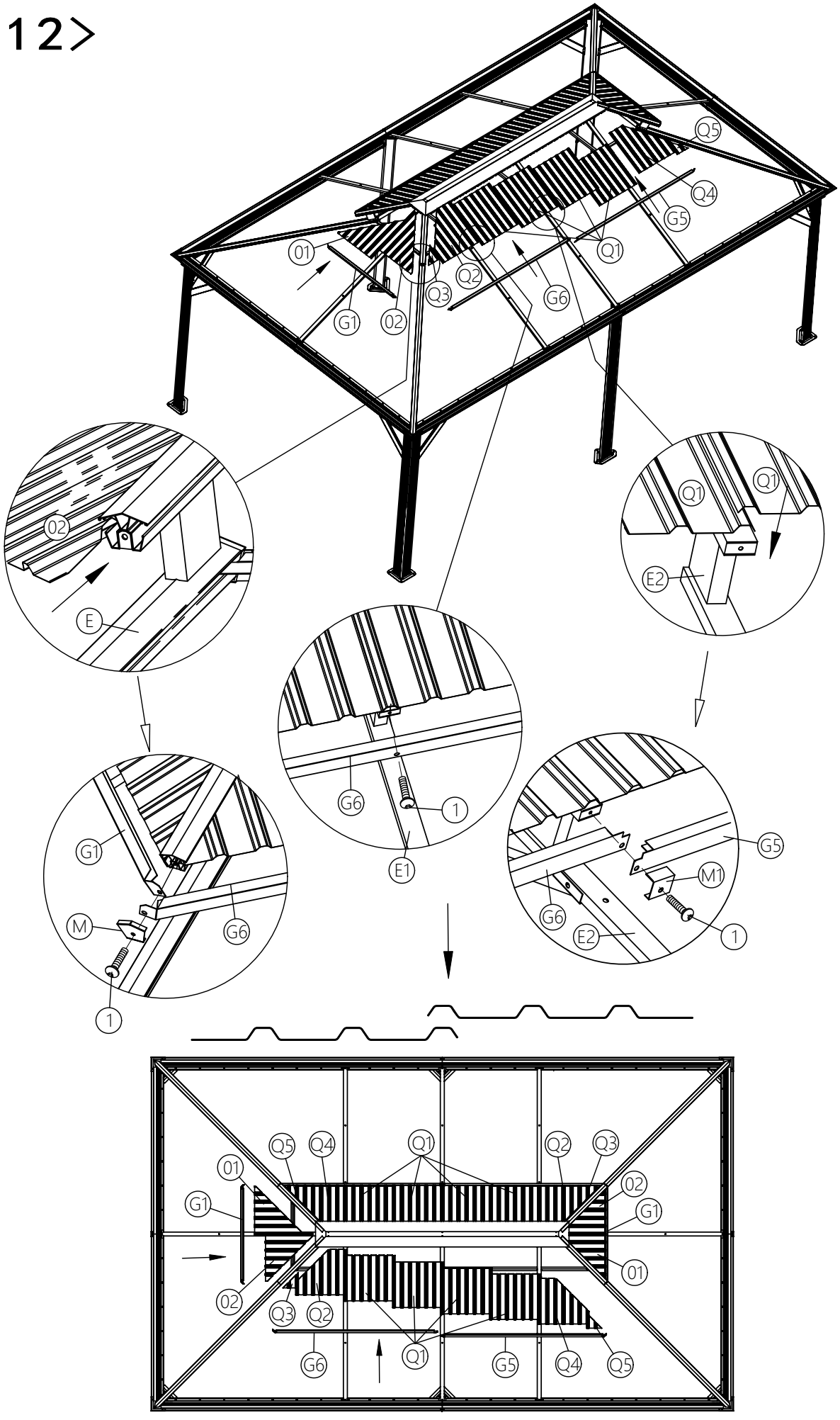

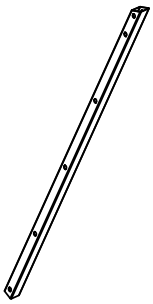

(F) 4X

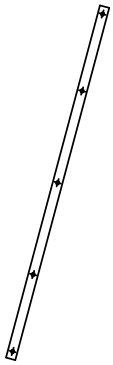

(F1) 4X

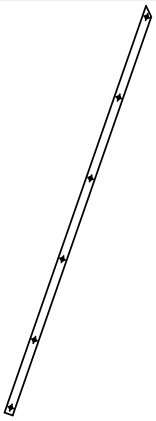

(F2) 4X

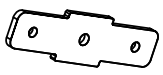

(X) 8X



(W) 4X



M6X15

(1) 36X



# <13>

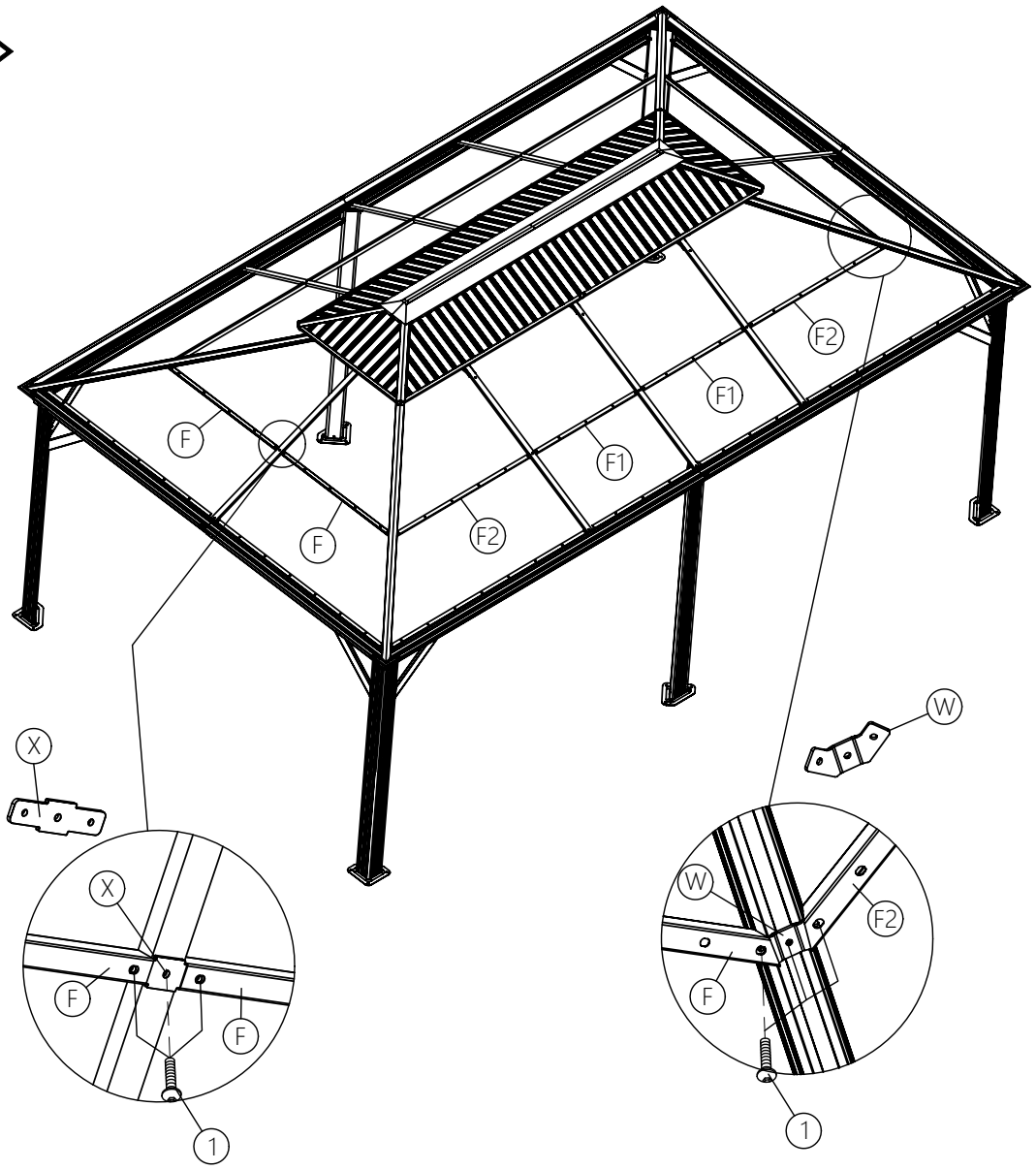


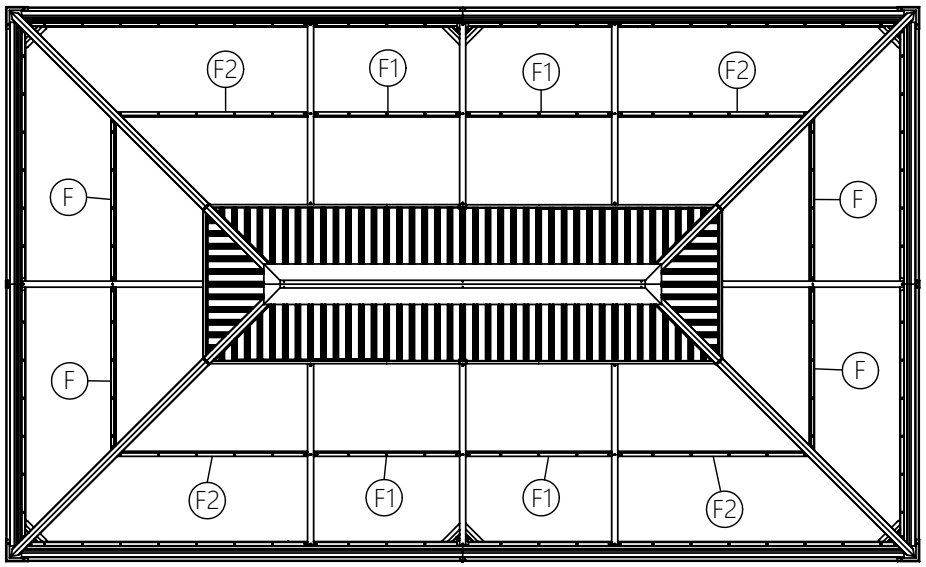

<14>

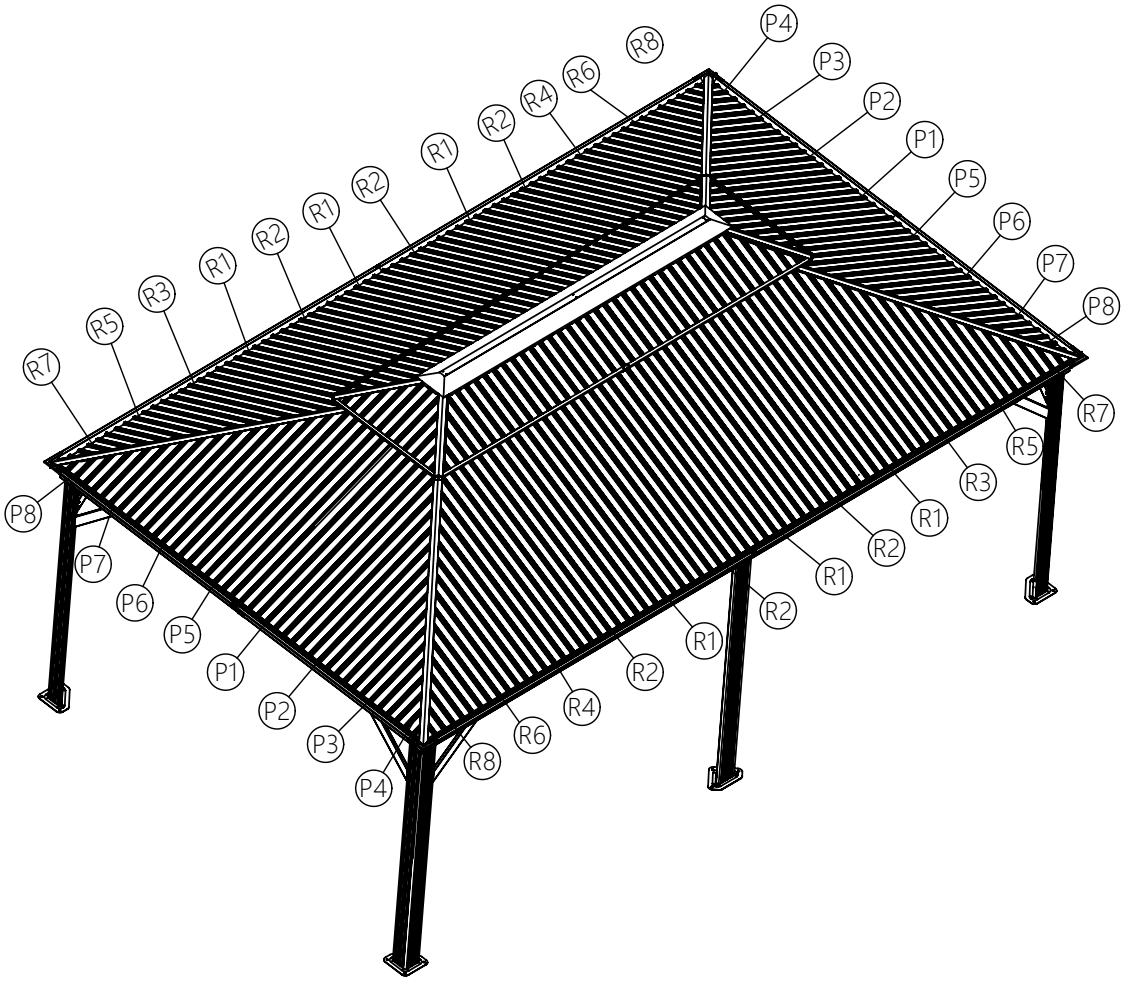
P4
P3
P2
P1
P5
P6
P7
P8
R8
R6
R4
R2
R1
R2
R1
R2
R1
R3
R5
R7
P8
P7
P6
P5
P1
P2
P3
P4
R8
R6
R4
R2
R1
R2
R1
R2
R1
R3
R5
R7

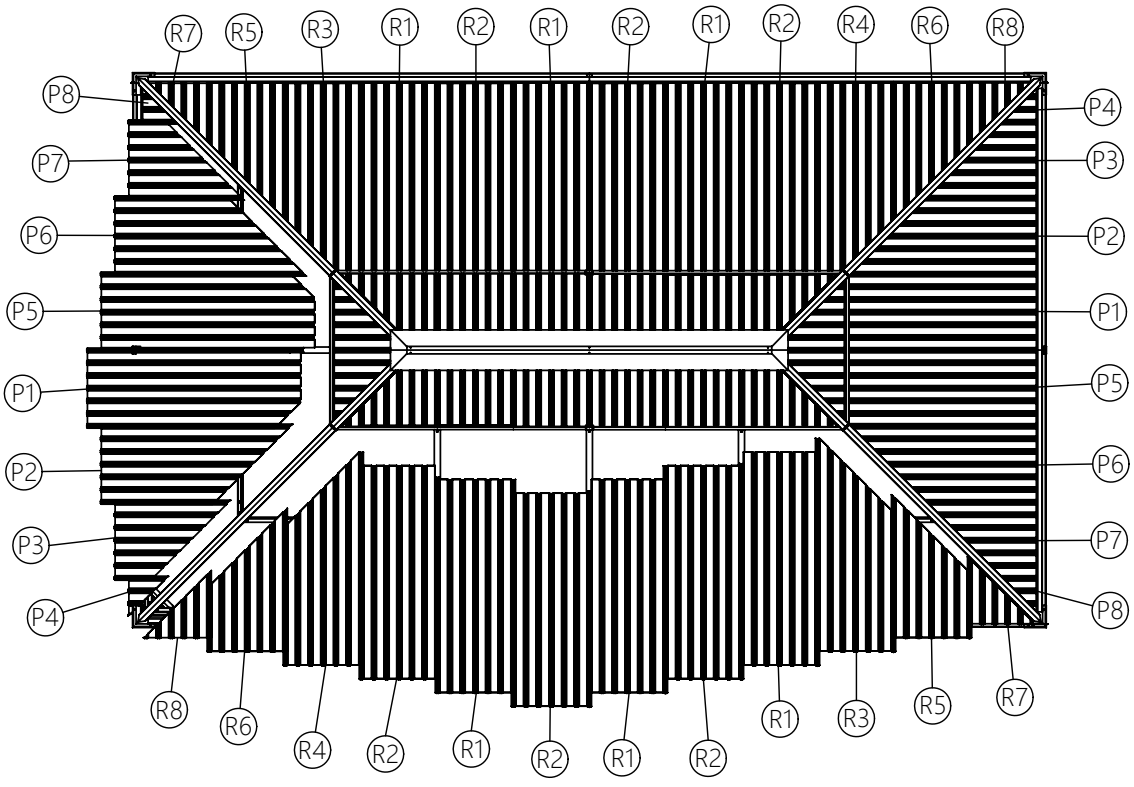
R7
R5
R3
R1
R2
R1
R2
R1
R2
R4
R6
R8
P8
P7
P6
P5
P1
P2
P3
P4
P4
P3
P2
P1
P5
P6
P7
P8
R8
R6
R4
R2
R1
R2
R1
R2
R1
R3
R5
R7

# <15>

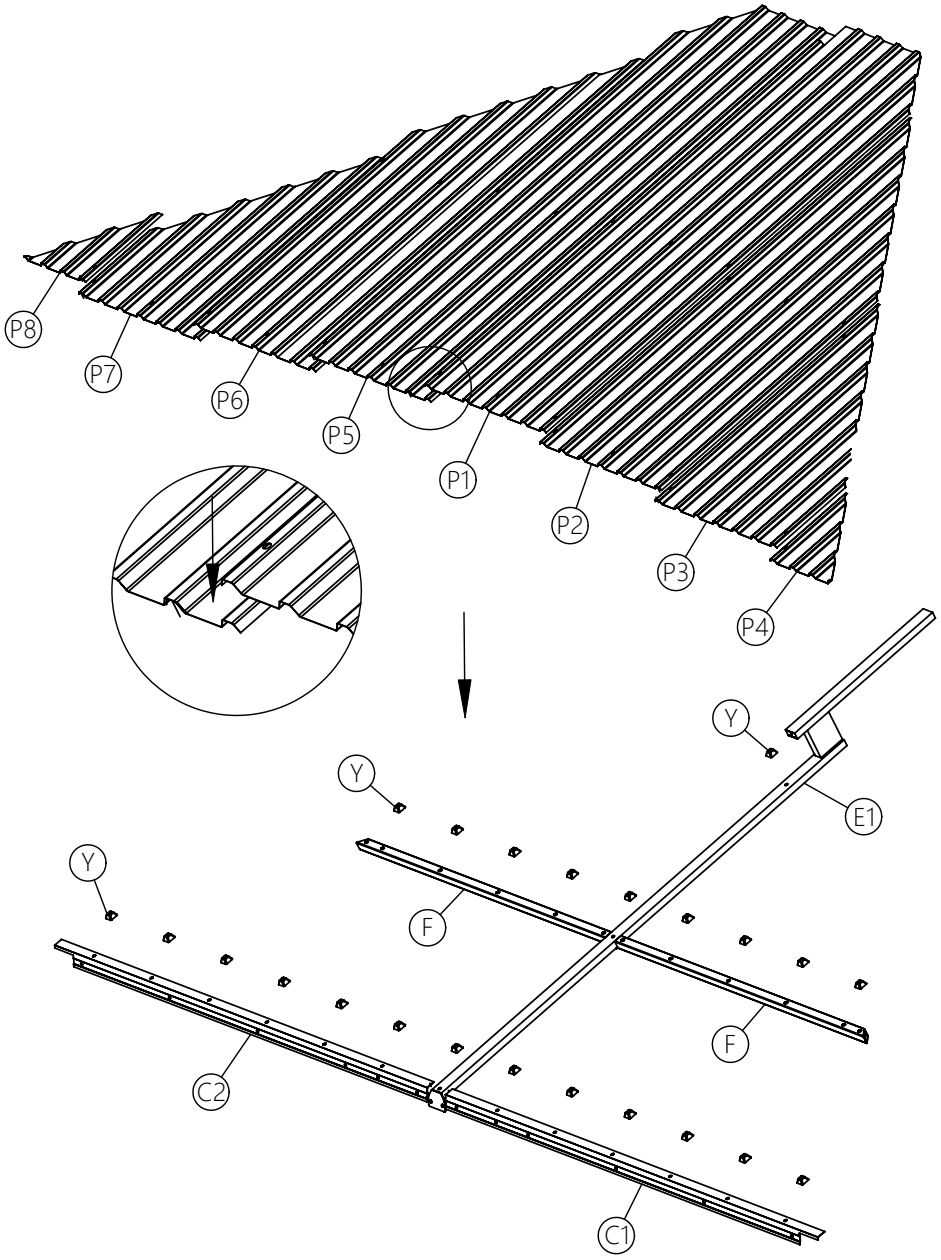

# <16>

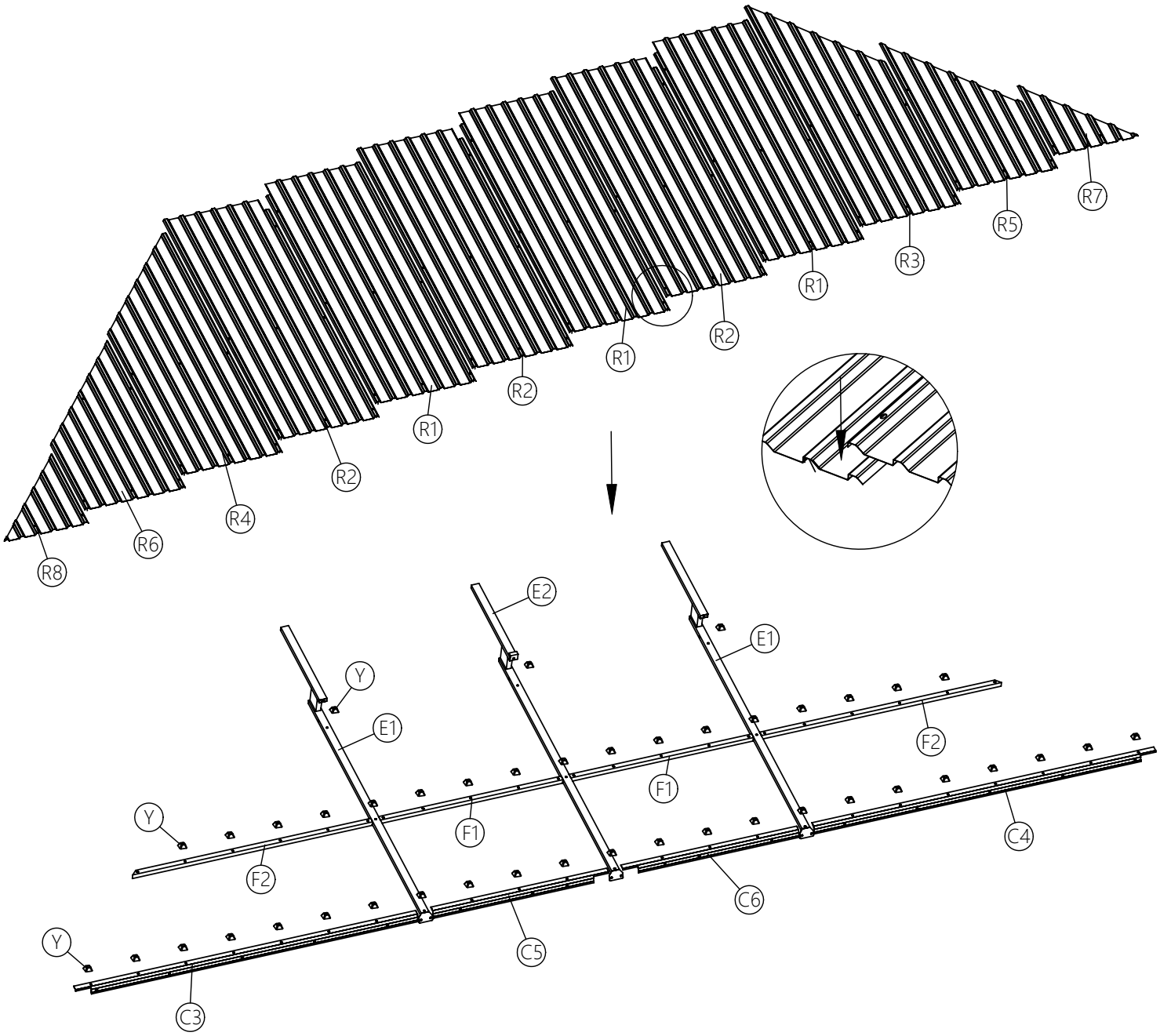

<17>

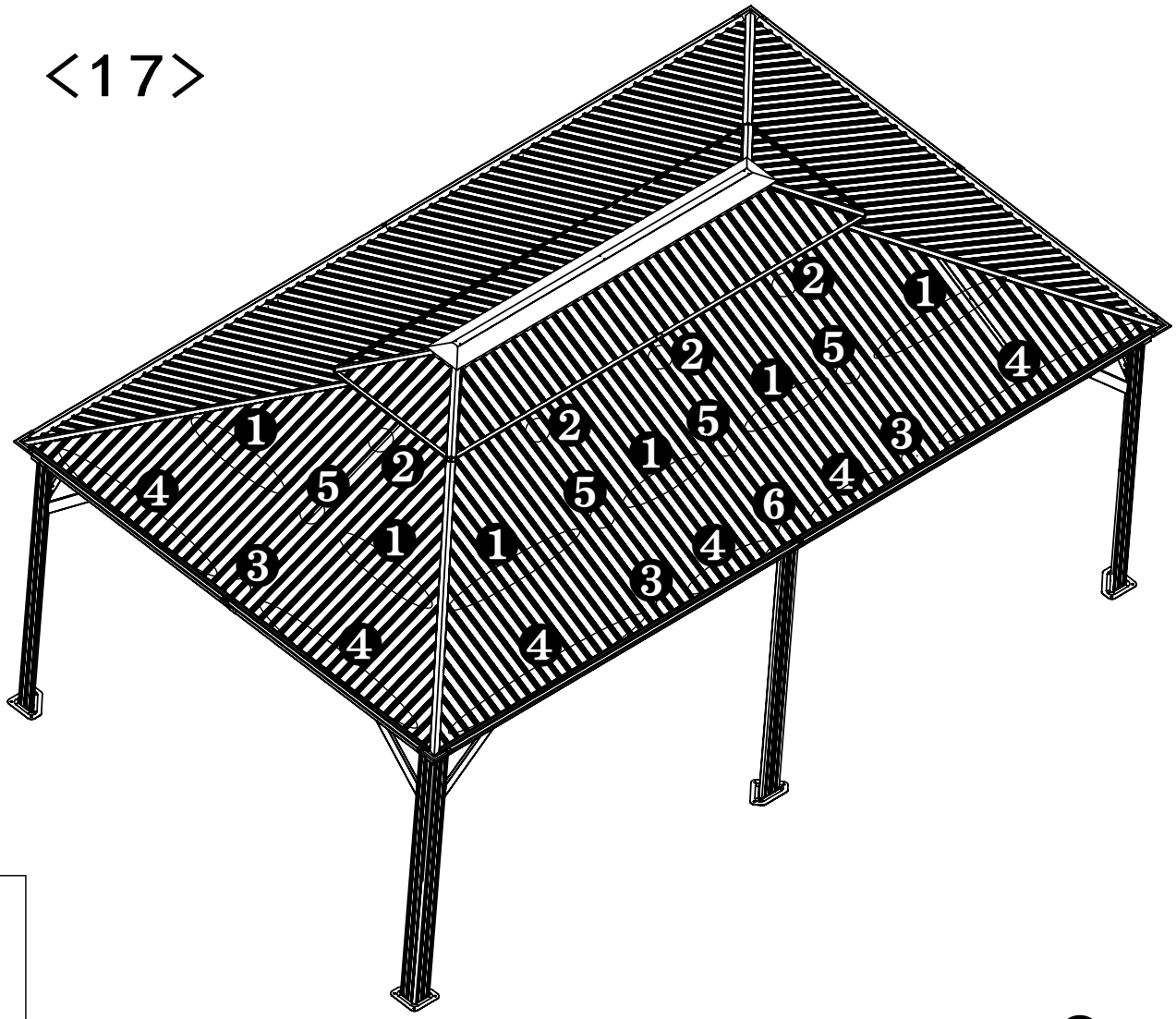

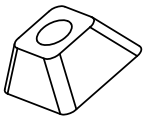

Y 132X



10X



64X

M6X20

2 10X+64X



M6X40

3 14X



M6X45

4 44X

21

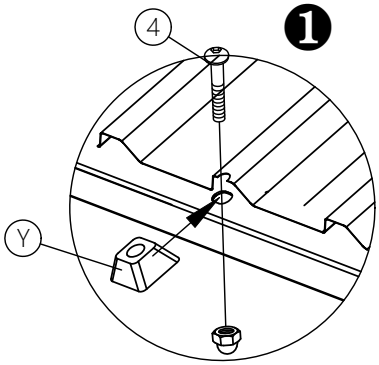


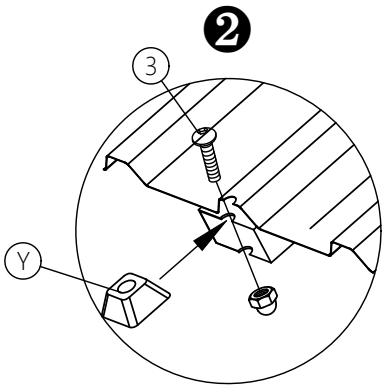


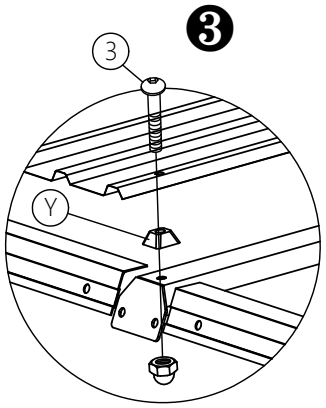


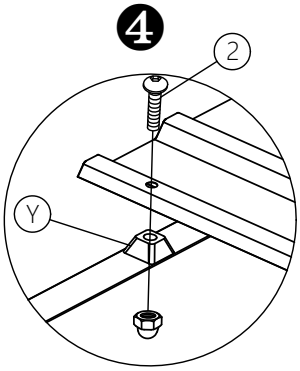


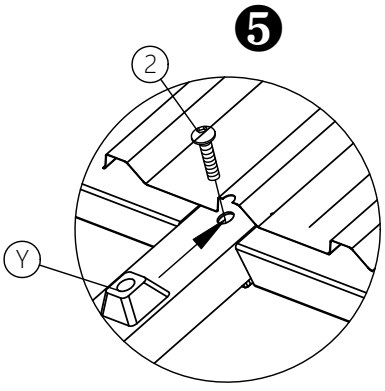


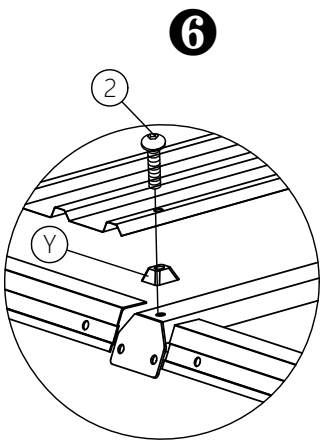

<18>

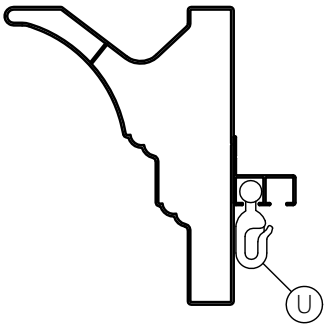
U

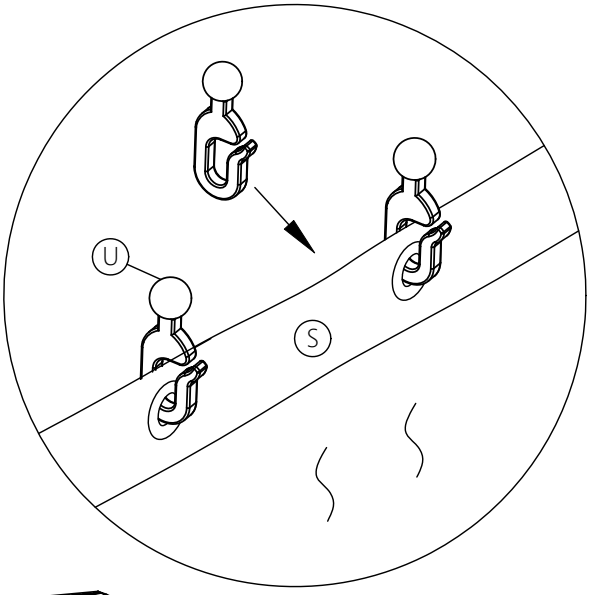
U
S

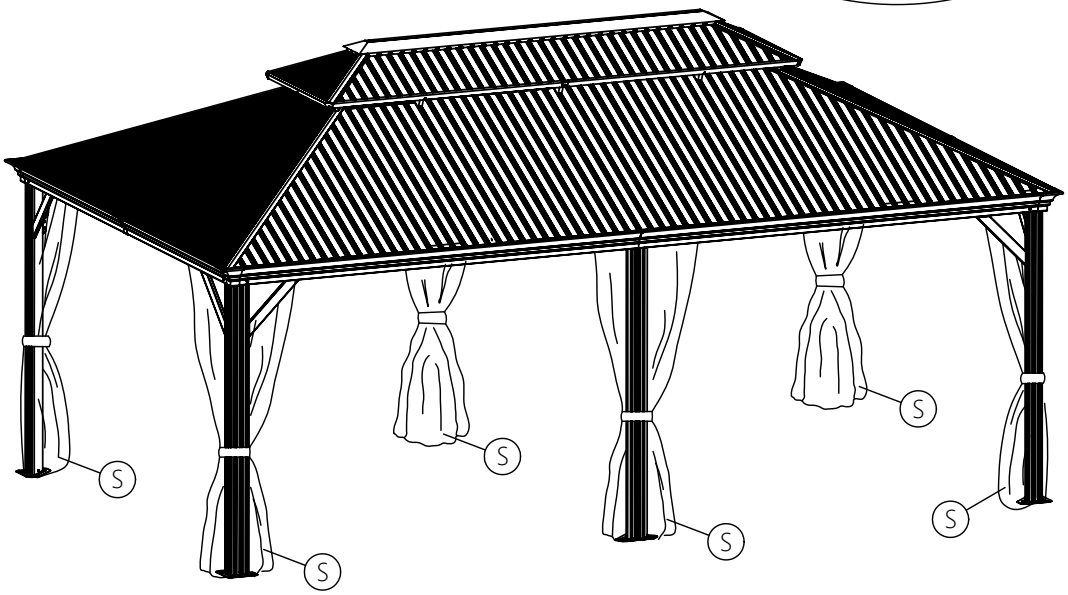
S
S
S
S
S

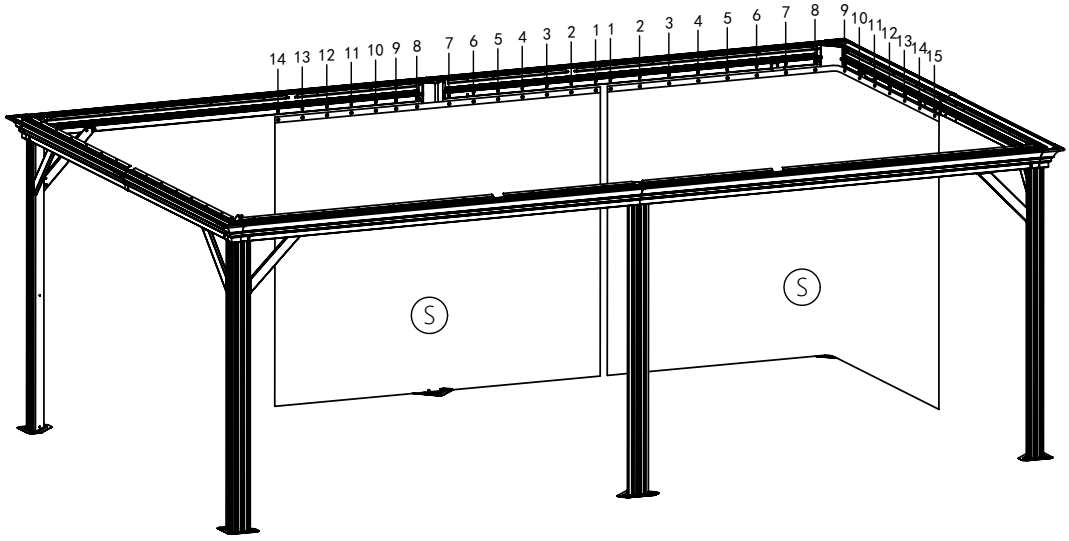
14 13 12 11 10 9 8 7 6 5 4 3 2 1 1 2 3 4 5 6 7 8 9 10 11 12 13 14 15
S
S

<19>

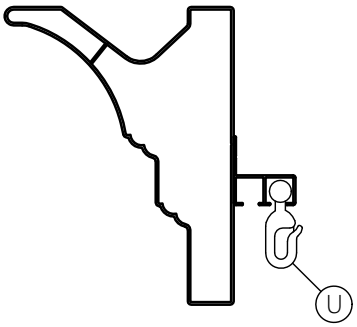
U

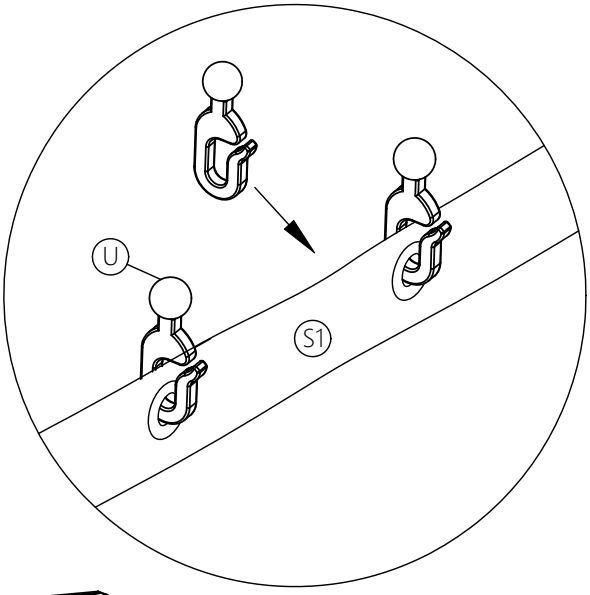
U
S1

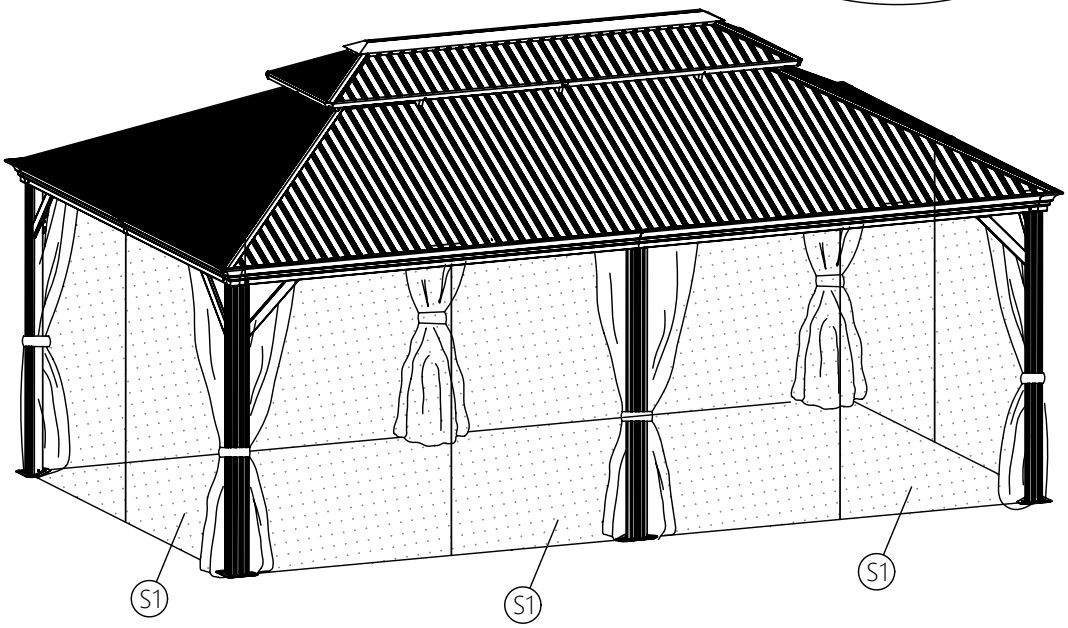
S1
S1
S1

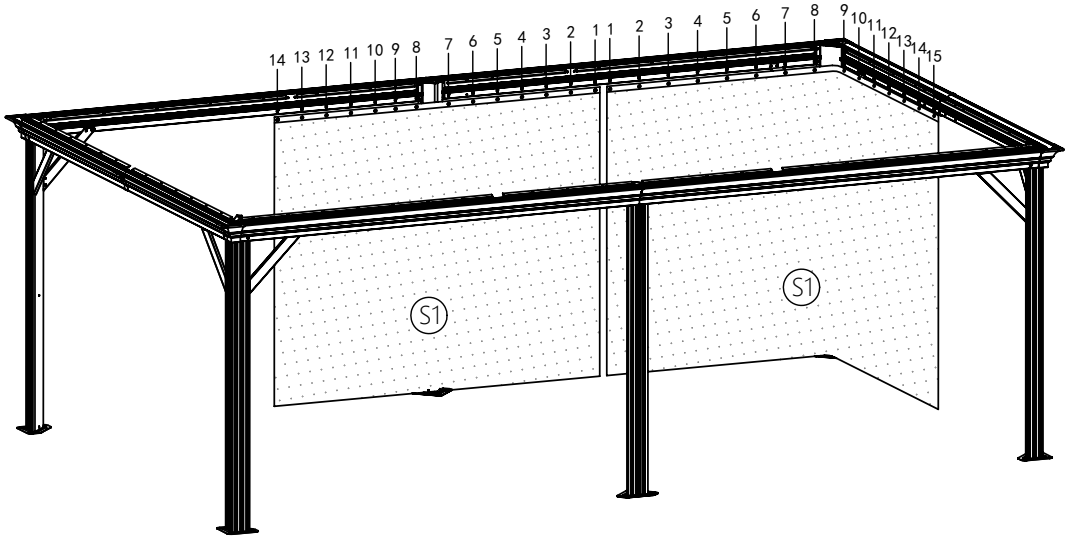
14 13 12 11 10 9 8 7 6 5 4 3 2 1 1 2 3 4 5 6 7 8 9 10 11 12 13 14 15
S1
S1

<20>

